APPENDIX A

A.1 Printer Specifications

Feature	Range
Printing Method:	Impact Dot Matrix, 9 pin
Protocols:	Digital's Conformance Level-2 (for sixel graphics) IBM Proprinter III (4201/4202-III) Epson FX-1050
Interfaces:	Serial,via 6 pin DECconnect type connector Parallel, via 36 pin Centronics type connector
Selectable Baud Rates:	150, 300, 600, 1200, 2400, 4800, 9600
Selectable Data Bits and Parity:	7-Even, 7-Odd, 7-Space, 7-Mark, 7-None 8-Even, 8-Odd, 8-None
Print Modes:	HSD, Draft, NLQ1/2 Quiet (double passes)
Average Print Speeds:	

Print	Speed
HSD	300 CPS
Draft	240 CPS
NLQ1	55 CPS
NLQ2	55 CPS

Text Printing Pitches:	
- Horizontal:	from 5 cpi to 20 cpi
- Vertical:	from 2 lpi to 12 lpi, and 1, 2, or 4 lines per centimeter
Graphic Resolutions:	
- Horizontal:	1/60", 1/72", 1/80", 1/90", 1/120", 1/144", 1/180", 1/240"
- Vertical:	1/72", 1/144"

Feature	Range
Character Sets:	**DEC PPL2**
	ASCII DEC Supplemental Dec VT100 Special Graphics DEC Technical ISO Latin-1 Supplemental National Replacement Character (NCR) Sets: British Dec Finnish French Dec French/Canadian German Iso Italian JIS Roman DEC Norway/Denmark ISO Spanish DEC Swedish Norway/Denmark DEC Dutch DEC Swiss DEC Portuguese Legal DEC Hebrew Character Sets: DEC 7-bit Hebrew DEC 7-bit Hebrew Supplemental ISO Latin Hebrew Supplemental Greek Character Sets: DEC Greek Supplemental ISO Latin Greek Supplemental Turkish Character Sets: DEC 7-bit Turkish DEC 8-bit Turkish Supplemental ISO Latin-5 Supplemental JIS Katana

Feature	Range
Character Sets:	**IBM PP III and Epson FX** USA (Code Page 437) Multilingual (Code Page 850) Portugal (Code Page 860) Norway (Code Page 865) National Spain (Code Page 220) Greece (Code Page 210) Canada-French (Code Page 863) Hebrew (Code Page 862) Turkey (Code Page 857)
Input Buffer:	16K characters with down-loadable character set capabi lity 32K characters with no down-loadable character set capability
Serial Communications Features:	Data flow control: Xon/Xoff or DTR Disconnect on Fault: Drop DTR or Pulse DTR or Break **Dec PPL2 specifics:** Auto answerback message, Answerback on ENQ, Disconnect on EOT, Initialization report
Optional Cards:	Character set cartridge Font cartridge Optional emulation
Resident Typestiles:	High Speed Draft Draft Sans Serif NLQ1 Sans Serif NLQ2 Serifed
Print Attributes:	Underline Double Underline Overline Italic Strike-through Shadow Bold Double Width

Feature	Range
Dimensions:	Width= 605 mm, Depth= 378 mm, Height= 110 mm.
Weight:	10 kg
Power Requirements:	120 V @ 1.6 A, 50/60 Hz, 50 W 220 V @ 1.0 A, 50/60 Hz, 50 W 240 V @ 1.0 A, 50/60 Hz, 50 W

A.2 Paper Specifications

Feature	Range
Paper Types:	Pinfeed (tractor media) Single sheets Up to 4 part forms (with no pull tractor) Envelopes
Continuous Paper (Tractor Media):	1. Single part continuous paper up to 16" (40.6 cm) wide including perforations is supported. The allowable weight for these forms is 56 to 90 g/m^2 (15 to 24 pounds per ream). 2. Multiple part forms: up to 16" wide including perforation: - 4 parts (1 original and 3 copies) with carbon: 150 to 270 g/m^2 Total thickness: .013"maximum (0.4 mm) - 4 parts (1 original and 3 copies) without carbon: 130 to 220 g/m^2 Total thickness: .013"maximum (0.4 mm) - **Note** **Hole spacing should be 12.7 mm +/- 0.25mm (0.50" +/- 0.01") non accumulative over 50.8 mm (2.00") with a hole diameter of 3.8mm to 4.1 mm (0.15" to 0.16").**
Single-sheet Paper:	Single-sheet plain bond, typewriter quality paper between 60 and 100 g/m^2. Hand-fed multiple-part forms (0.013" max. thickness) and up to 16.5" in width.

APPENDIX B

B.1 Spares and Part Number

Ref.	Pag.	Seller's P/N	DEC P/N	Description
1	B-2	755800M	29-30357-01	Console Assembly
2	B-3	413414F	29-30358-01	Mechanical Assembly (no Printhead)
3	B-3	413413E	29-30359-01	Main Board (with Firmware and Interfaces)
4	B-3	728795G	29-30361-01	Power Supply 220 V
4	B-3	728796H	29-30362-01	Power Supply 240 V
4	B-3	728797A	29-30360-01	Power Supply 115 V
5	B-3	756412U	29-30363-01	Printhead
6	B-3	755812U	29-30364-01	Printhead Cable
7	B-2	757113Z	29-30365-01	Console Overlay
8	B-2	758274T	29-30367-01	Main Casing (includes SI cover)
9	B-2	758135G	29-30366-01	Paper Guide Panel Group
10	B-3	757637E	29-30370-01	Paper Select Lever
11	B-3	757701P	29-30369-01	Platen Knob
12	B-2	758275U	29-30368-01	Top Cover Assembly
13	B-2/3	757717E	29-30372-01	Miscellaneous Kit

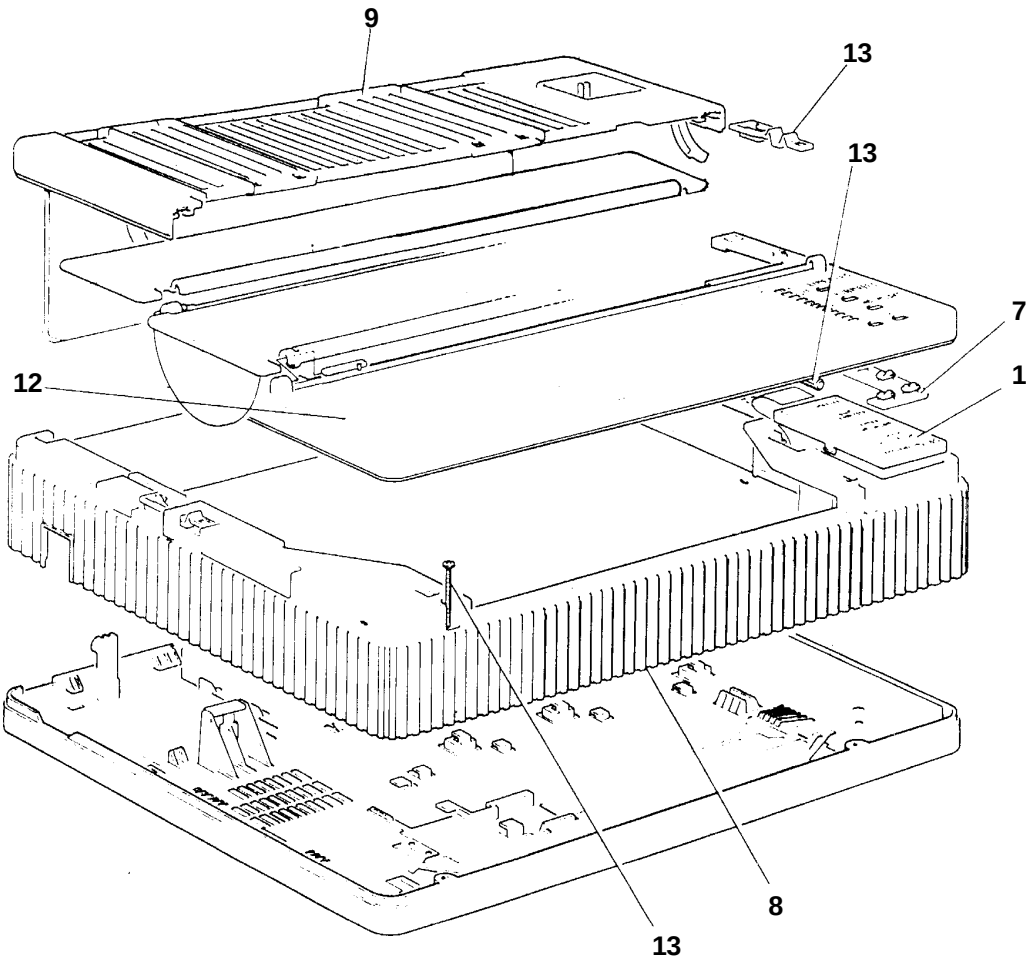
9
13
13
7
1
12
8
13

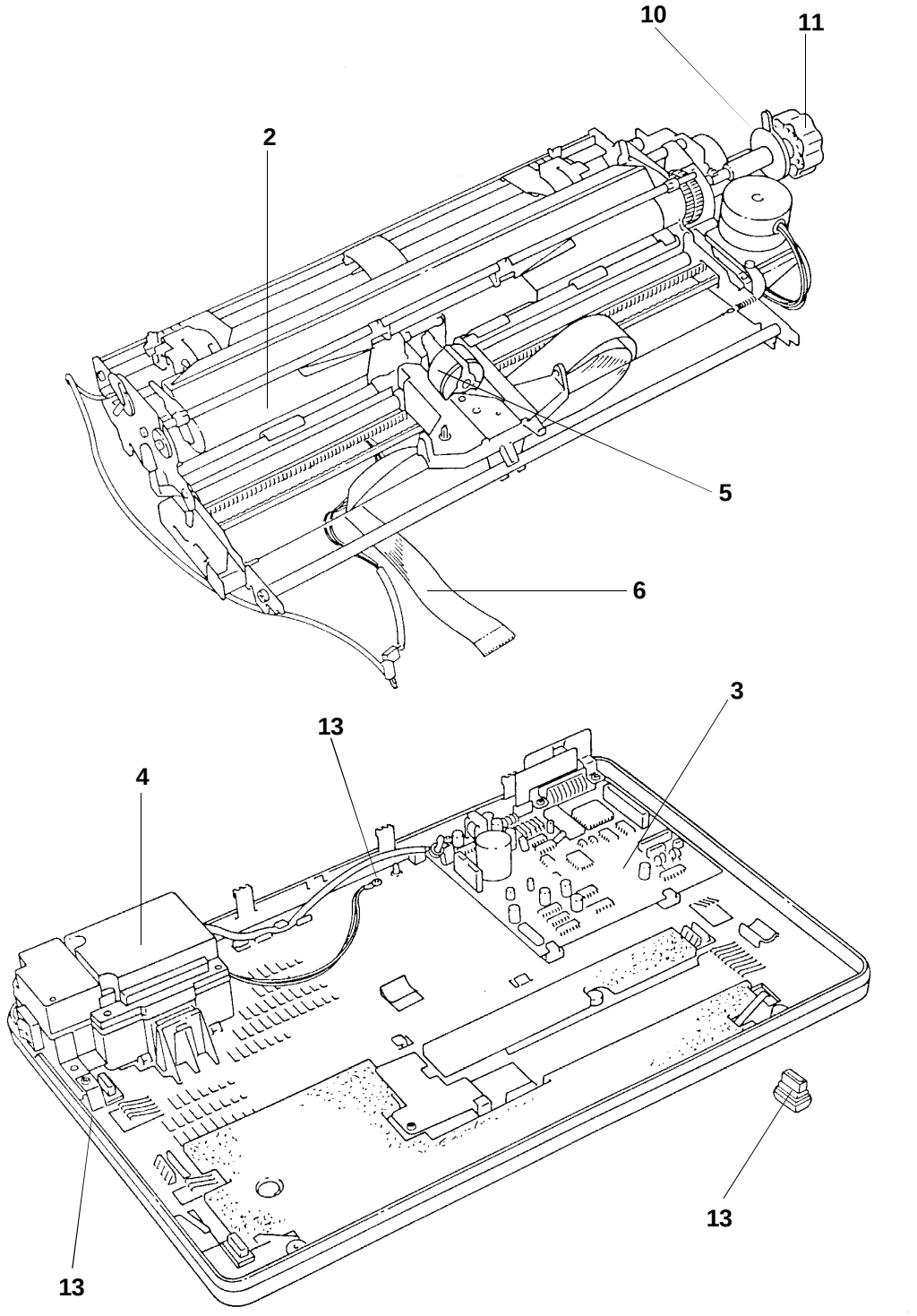
10
11
2
5
6
3
13
4
13
13

APPENDIX C

C.1 Set-up Configuration

Set-up mode enables you to customize the printer for your specific use.
This appendix shows the structure of the Set-up menus, and can be used in conjunction with Chapter 3. In the following figures,bolded items are the default settings.

C.1.1 Set-up Directory

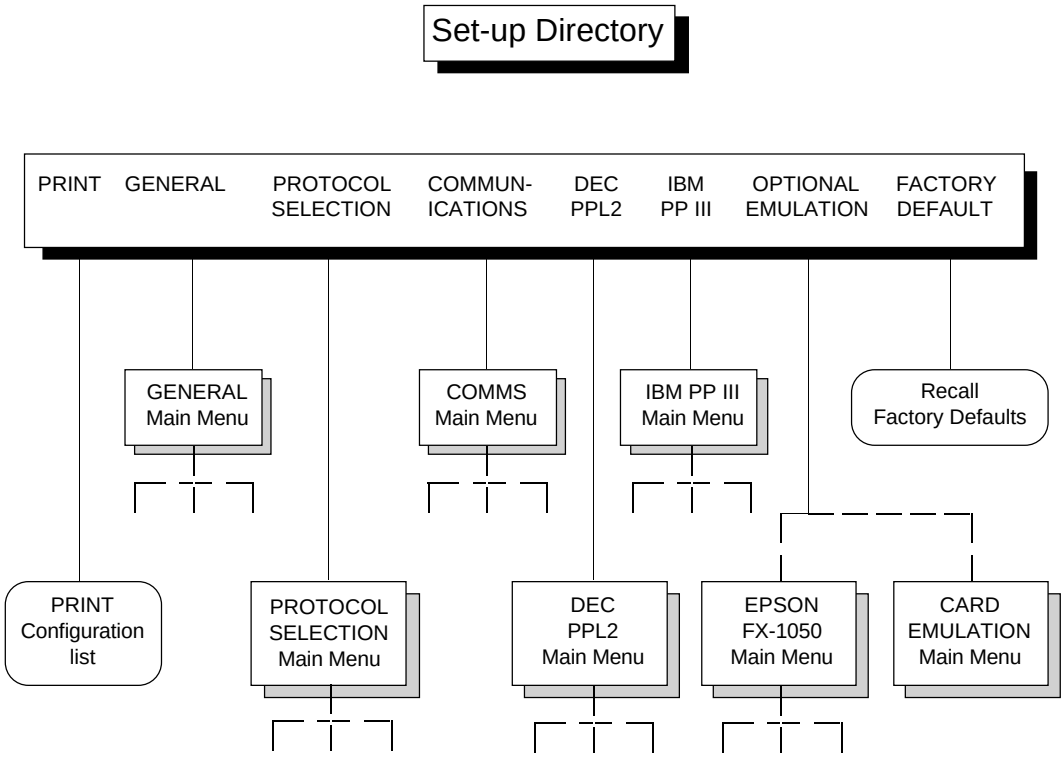

C.1.2 General Main Menu

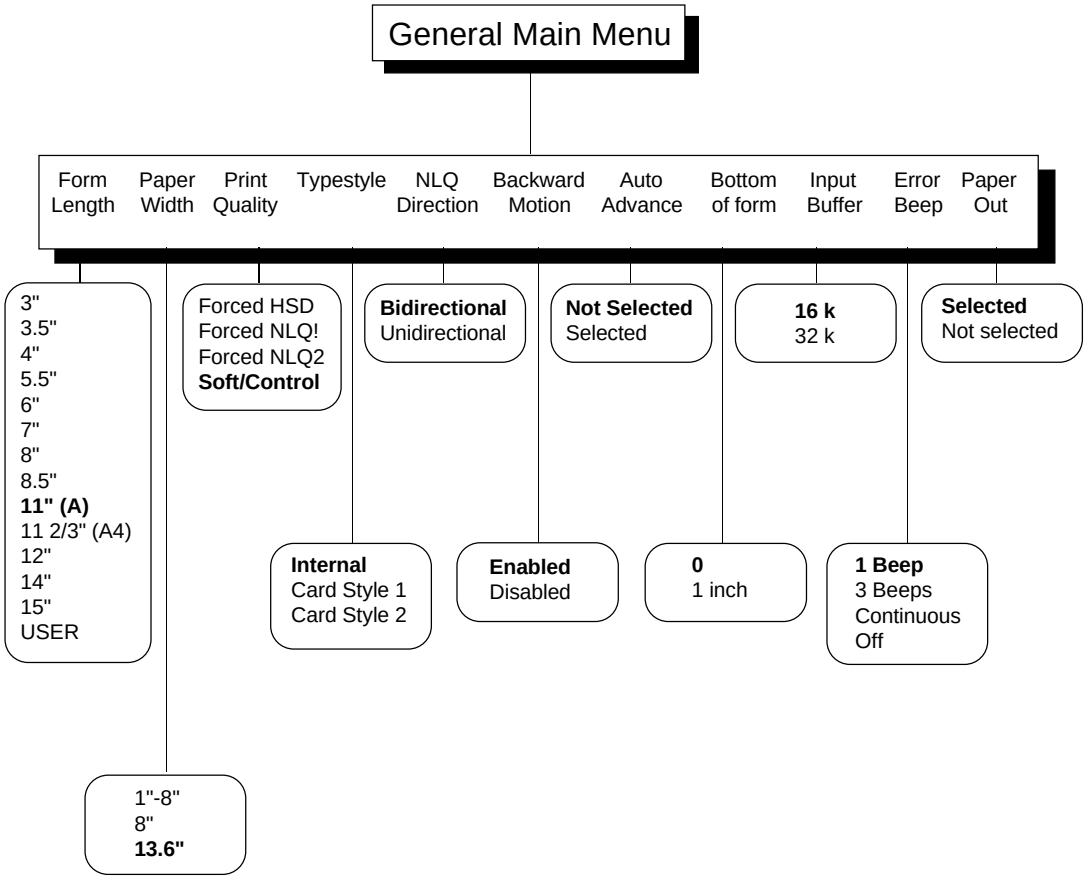

C.1.3 Protocol Selection Main Menu

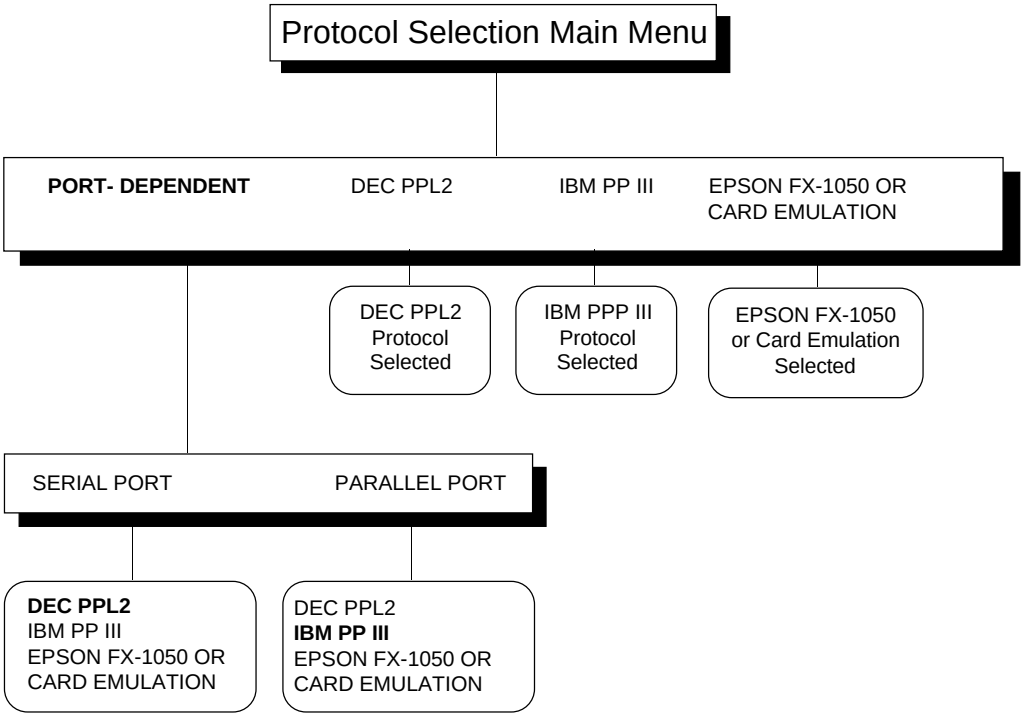

C.1.4 Communications Main Menu

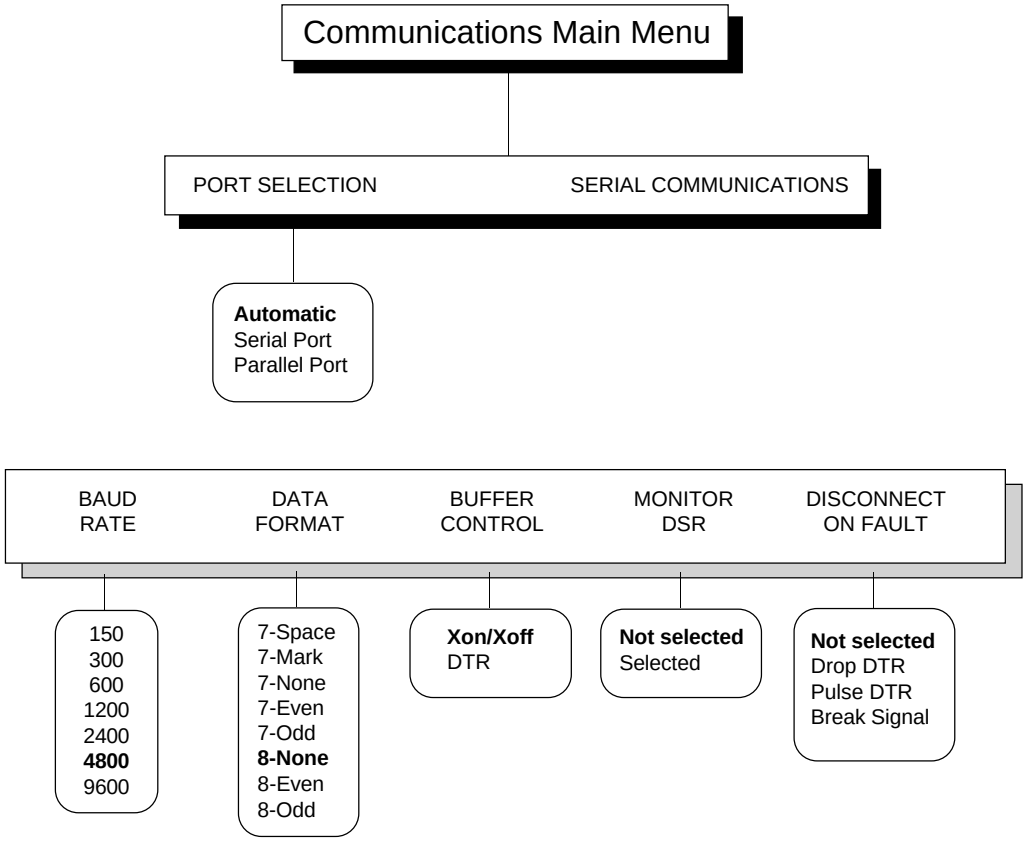

C.1.5 DEC PPL2 Main Menu

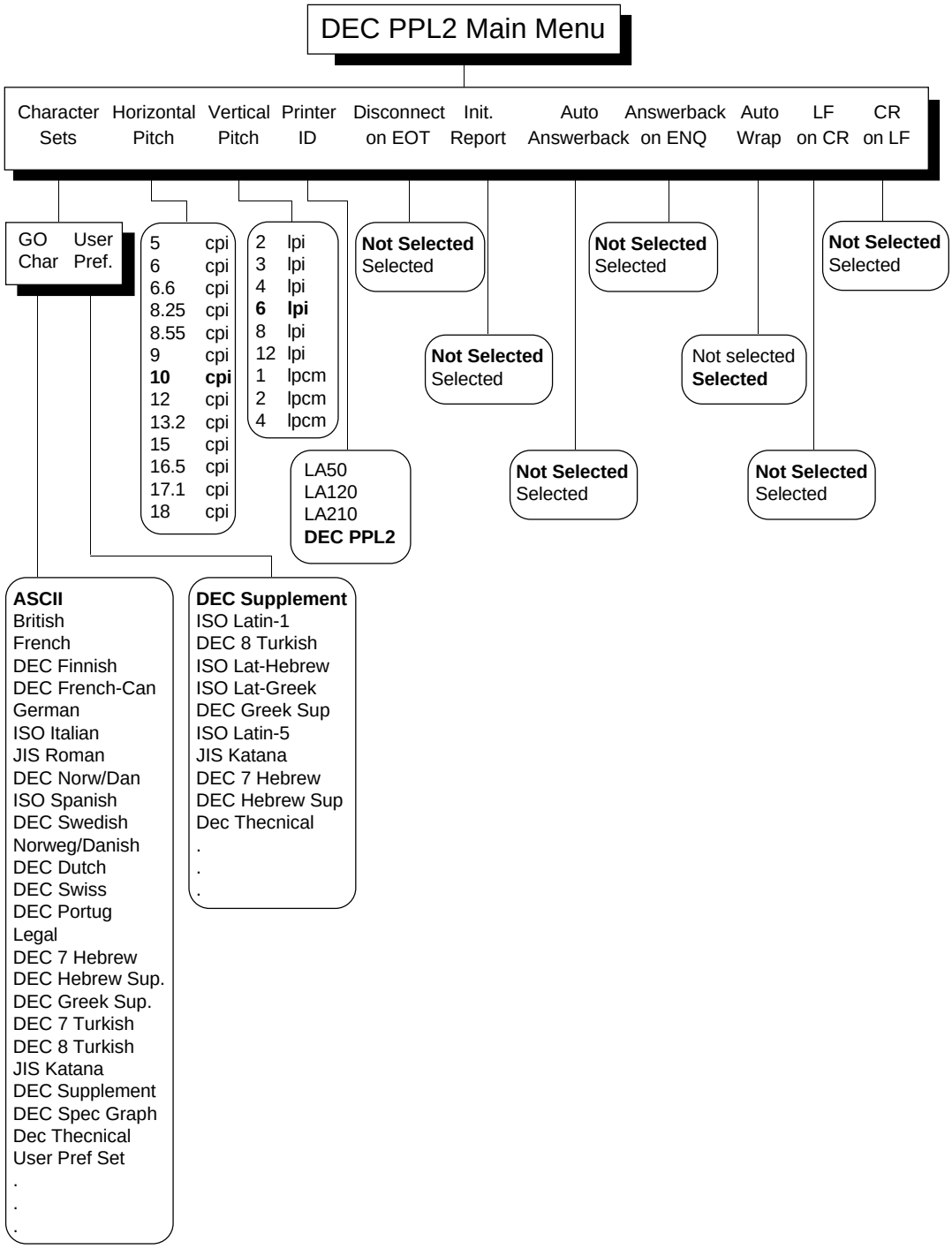

C.1.6 IBM PP III Main Menu

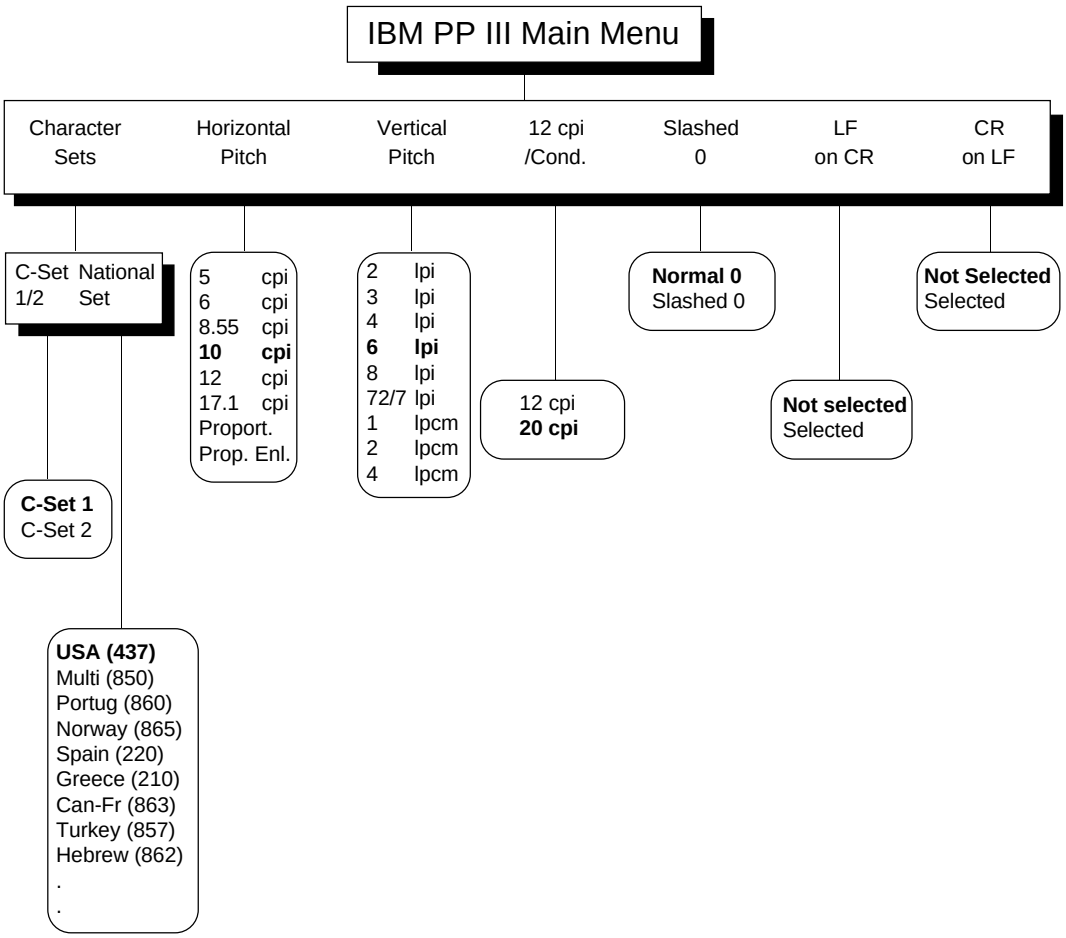

C.1.7 Epson FX-1050 Main Menu

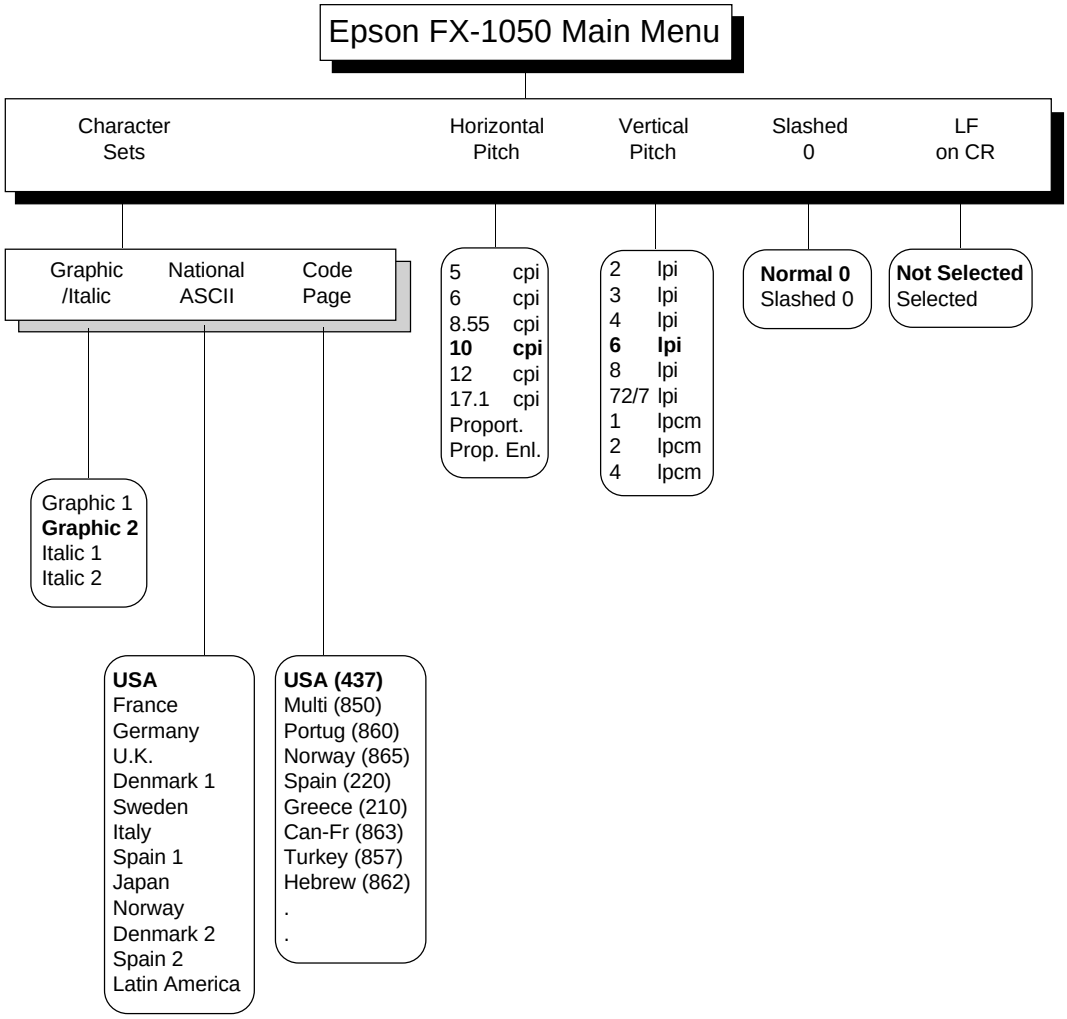

APPENDIX D

D.1 General Block Diagram

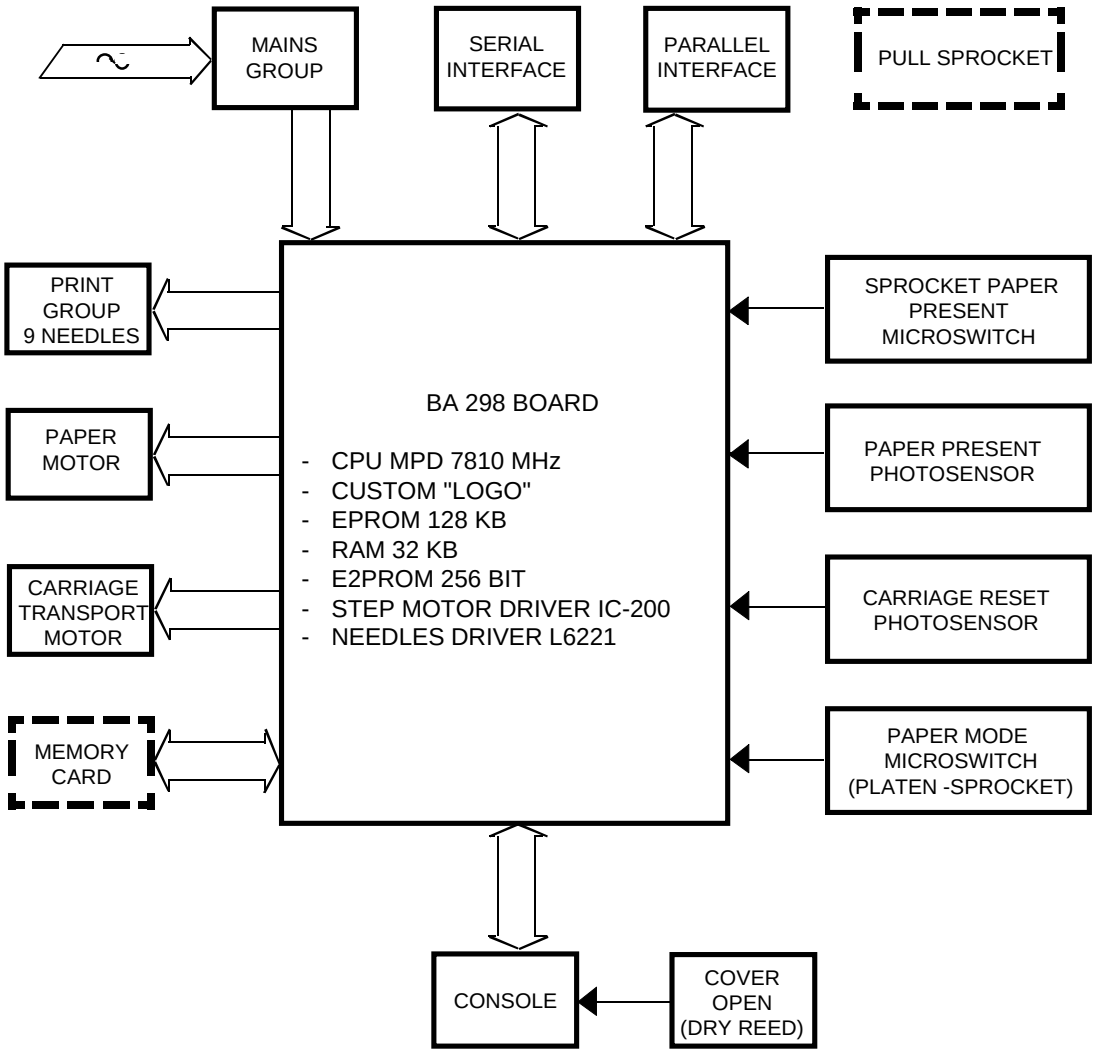

D.2 DC\AC Power Supply

The printer is set by the factory to be connected to the following nominal voltages:

120 V±10%, 50/60 Hz

220 V±10%, 50/60 Hz

240 V±10%, 50/60 Hz

The secondary voltage of the transformer is 29.5 V effective (±0.5 V) and the max. current is 3 A.

The mains group is provided with a 630 mA fuse for the 220/240 V and with a 1.25 A fuse for 120 V. The voltages generated by the power supplier (on the mother board) are the following:

- +35 V not stabilized for the motor and needle drivers (the motor circuit is protected by a 1.6 A fuse (F3) and the needle circuit is protected by a 3.15 A fuse (F2)).

- +50 V not stabilized for the needle circuit

- +5 V stabilized for the logic voltage.

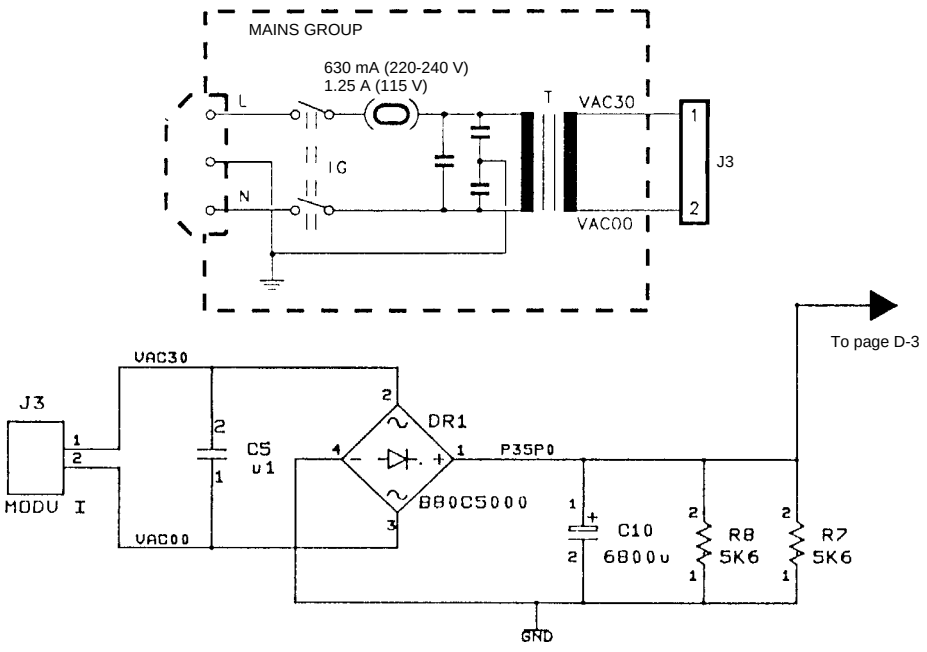

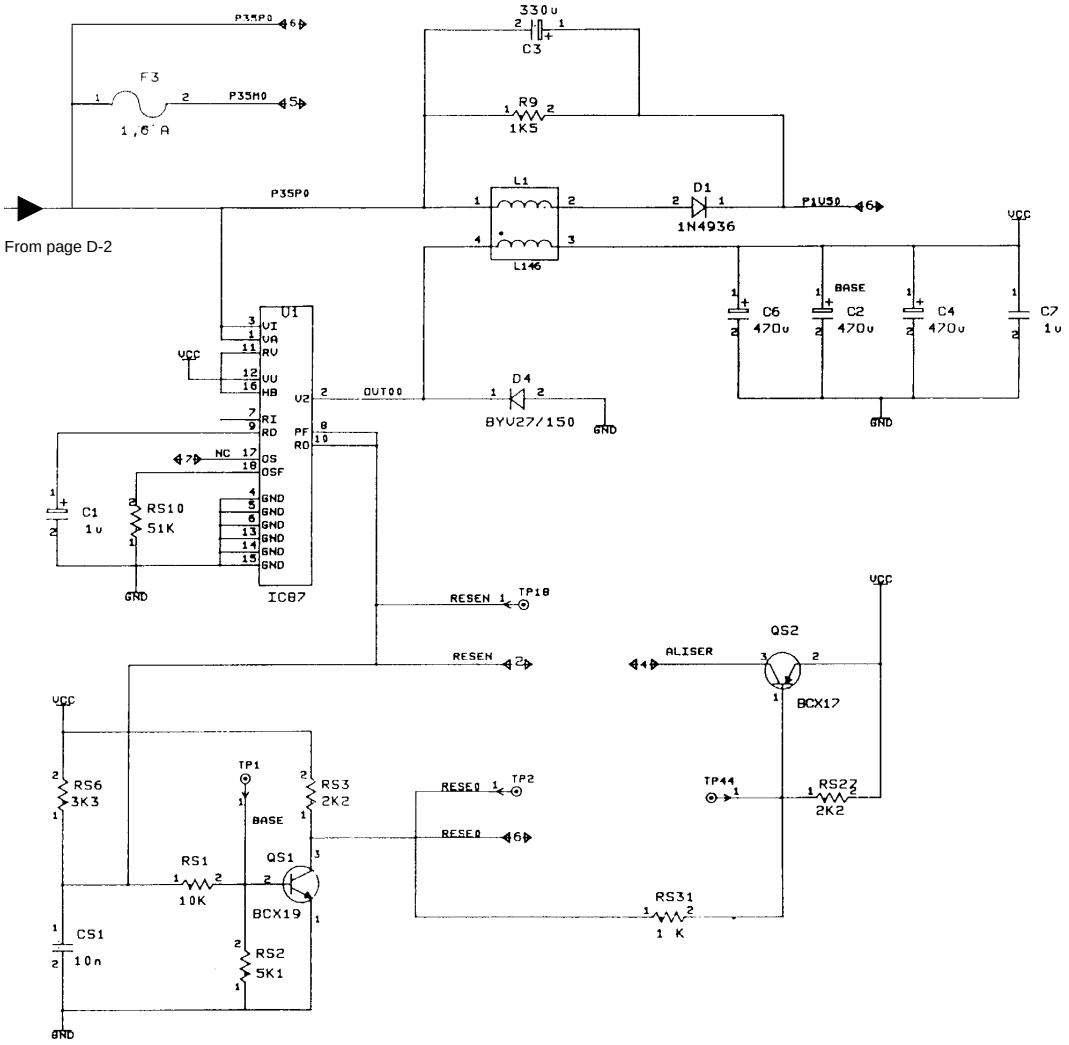
From page D-2
P35P0
F3
1,6 A
P35M0
330u
C3
R9
1K5
L1
L146
D1
1N4936
P1V50
VCC
C6
470u
C2
470u
C4
470u
C7
1u
BASE
U1
VI
VA
RV
VU
HB
V2
RI
RD
PF
RO
NC
OS
OSF
GND
OUT00
D4
BYV27/150
C1
1u
RS10
51K
IC87
RESEN
TP18
QS2
ALISER
BCX17
RS6
3K3
TP1
RS3
2K2
BASE
RESE0
TP2
TP44
RS22
2K2
RS1
10K
QS1
BCX19
RS31
1 K
CS1
10n
RS2
5K1

D.3 BA 298 Board

D.3.1 I/O Signal General Description

This diagram shows the functional blocks of the mother board BA 298 and the external components interfacing the board. For each I/O signal of the board the following are indicated: name, logic level, function, the connector abbreviation containing it and the relevant pin.

The function and the level of the board internal signals are described in the specific pages of the CPU MPD 7810 and “LOGO” custom. The signal direction is shown by the arrows on the single lines.

Ther functional blocks of the board contain a function abbreviation (when the block corresponds to an integrated circuit), a brief description of the function carried out and a reference number of the schematics logic drawing.

Example: the block marked with the DR35 abbreviation identifies the diode rectifier bridge shown in the 01 logic diagram.

The left hand side of the general diagram shows the connectors interfacing the mains group, the optional memory card, the optional serial and parallel interface and the console.

The right side shows the connectors interfacing the drivers and the signal devices of the printer.

Board BA 298 is divided into the following functional blocks:

D.3.2 CPU and EPROM-SRAM-E2PROM Memories

The CPU operates with a basic firmware contained in a single 64 Kbyte EPROM. This firmware emulates the IBM Proprinter III and EPSON FX1050 printers.

The memory card may also contain an additional emulation or an extension of the character generator. In any case , the emulation or the additional character set can be used alternately.
The SRAM has a capacity of 32 Kbytes and can be expanded with the memory card.

The E2PROM contains 256 bits (16x16) at sequential access which can be cancelled or rewritten with the set-up procedure of the printer parameters.

D.3.3 “LOGO” Custom

It groups most of the I/O printer functions. The interface signals and the custom functional blocks are shown in pages 1-5 and 1-9.

D.3.4 Needle Drive Circuit

It includes the needle command storage circuit DKHO, the darlington switches KQ22 and the needle fire timing logic. The firing configuration is caused by signals DAD00-7 and AGO09 for the ninth needle.

The needle power circuit is protected by fuse PF8N which interrupts the +35 V when the printhead is overheated.

The max. supply voltage is 2.2 A.

D.3.5 Paper and Carriage Motor Drive Circuit

The power circuit is based on components CMA7. The motor phase signals are generated by the “LOGO” custom whilst the motor phase timing is referred to the CPU.

D.3.6 Console LED Drive Circuit

The console LEDs are driven by the display driver DD04.

D.3.7 Reverse Channel, CTS, RTS Signal Storing Circuit

This circuit, formed by F/F DHT4 and and/or ports, activates the drive signals of the serial interface in output from the printer.

D.3.8 Console Signals, Sensors and Microswitches

These signals are asynchronous with respect to the CPU events and therefore are handled by the interrupt logic. The interrupts are generated for paper end signal, carriage reset and console key command.

D.3.9 BA 298 Board Block Diagram

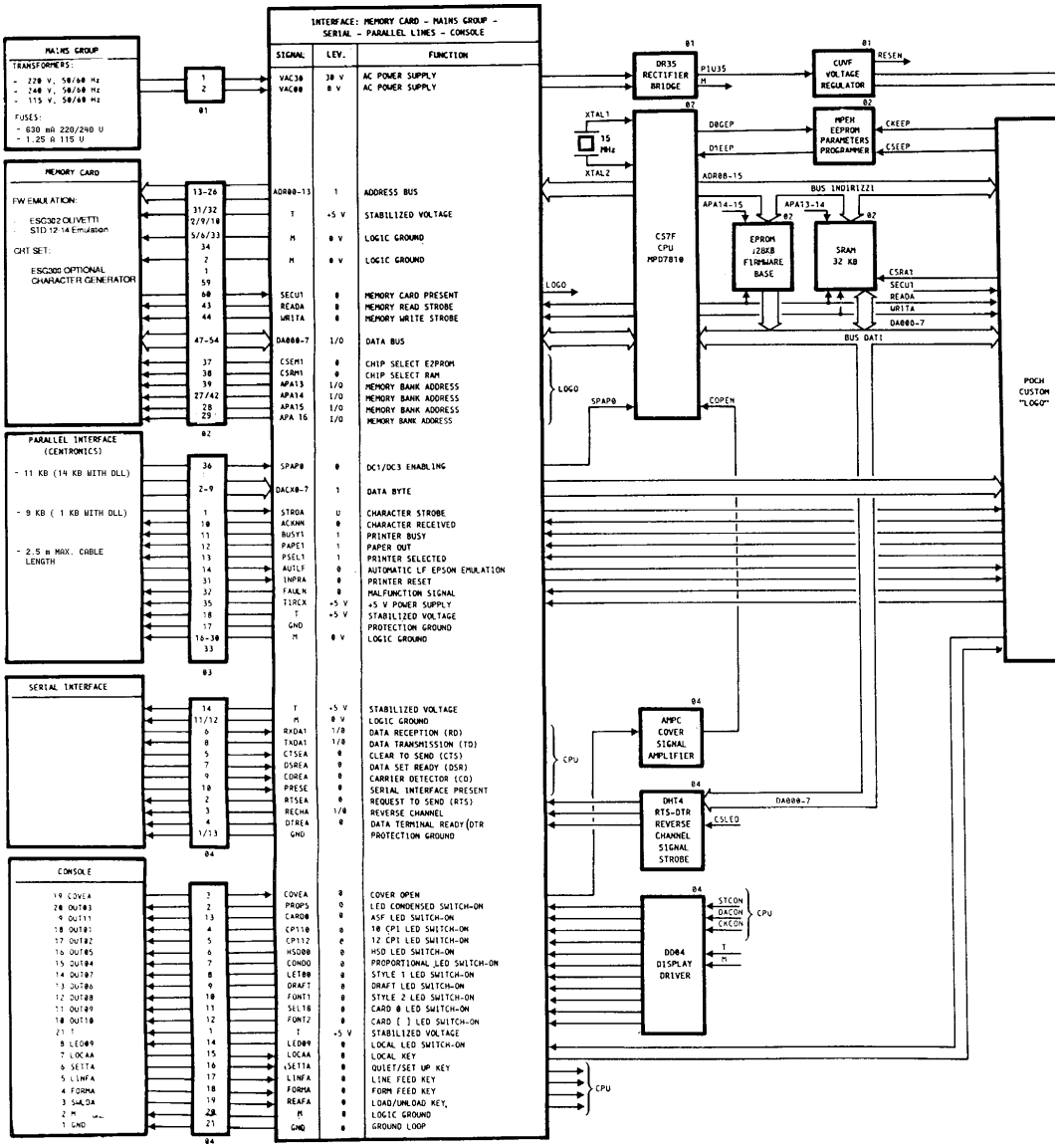

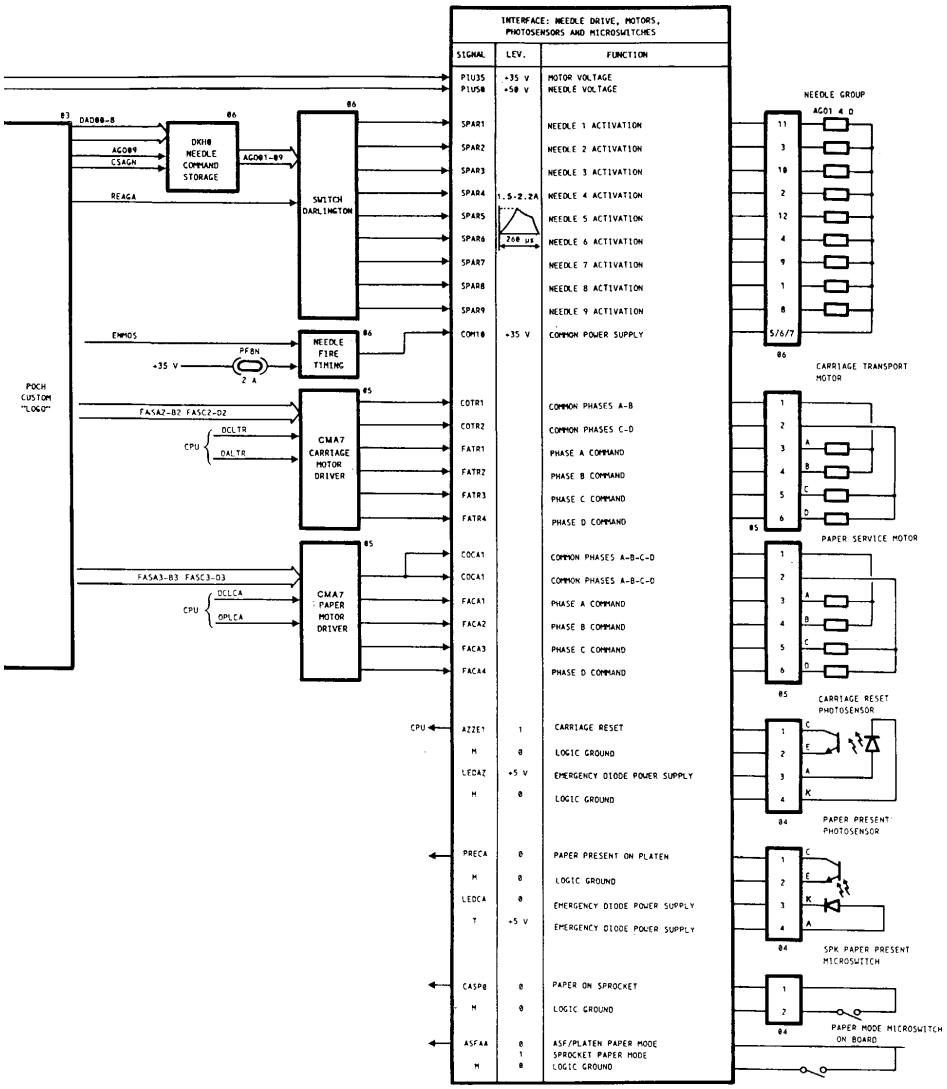
INTERFACE: NEEDLE DRIVE, MOTORS, PHOTOSENSORS AND MICROSWITCHES
SIGNAL
LEV.
FUNCTION
PIU35 +35 V MOTOR VOLTAGE
PIU50 +50 V NEEDLE VOLTAGE
SPAR1 NEEDLE 1 ACTIVATION
SPAR2 NEEDLE 2 ACTIVATION
SPAR3 NEEDLE 3 ACTIVATION
SPAR4 1.5-2.2A NEEDLE 4 ACTIVATION
SPAR5 NEEDLE 5 ACTIVATION
SPAR6 260 µs NEEDLE 6 ACTIVATION
SPAR7 NEEDLE 7 ACTIVATION
SPAR8 NEEDLE 8 ACTIVATION
SPAR9 NEEDLE 9 ACTIVATION
COM10 +35 V COMMON POWER SUPPLY
COTR1 COMMON PHASES A-B
COTR2 COMMON PHASES C-D
FATR1 PHASE A COMMAND
FATR2 PHASE B COMMAND
FATR3 PHASE C COMMAND
FATR4 PHASE D COMMAND
COCA1 COMMON PHASES A-B-C-D
COCA1 COMMON PHASES A-B-C-D
FACA1 PHASE A COMMAND
FACA2 PHASE B COMMAND
FACA3 PHASE C COMMAND
FACA4 PHASE D COMMAND
CPU AZZE1 1 CARRIAGE RESET
M 0 LOGIC GROUND
LEDAZ +5 V EMERGENCY DIODE POWER SUPPLY
M 0 LOGIC GROUND
PRECA 0 PAPER PRESENT ON PLATEN
M 0 LOGIC GROUND
LEDCA 0 EMERGENCY DIODE POWER SUPPLY
T +5 V EMERGENCY DIODE POWER SUPPLY
CASP0 0 PAPER ON SPROCKET
M 0 LOGIC GROUND
ASFAA 0 ASF/PLATEN PAPER MODE
1 SPROCKET PAPER MODE
M 0 LOGIC GROUND
03 DAD00-8
AGD09
CSAGN
REAGA
DKH0 NEEDLE COMMAND STORAGE
AGD01-09
SWITCH DARLINGTON
ENMOS
+35 V
PF8N
2 A
NEEDLE FIRE TIMING
POCH CUSTOM "LOGO"
FASA2-B2 FASC2-D2
CPU
DCLTR
DALTR
CMA7 CARRIAGE MOTOR DRIVER
FASA3-B3 FASC3-D3
DCLCA
DPLCA
CMA7 PAPER MOTOR DRIVER
NEEDLE GROUP
AGD1 4 D
5/6/7
CARRIAGE TRANSPORT MOTOR
PAPER SERVICE MOTOR
CARRIAGE RESET PHOTOSENSOR
PAPER PRESENT PHOTOSENSOR
SPK PAPER PRESENT MICROSWITCH
PAPER MODE MICROSWITCH ON BOARD

D.3.10 BA 298 Board Component Location and Function

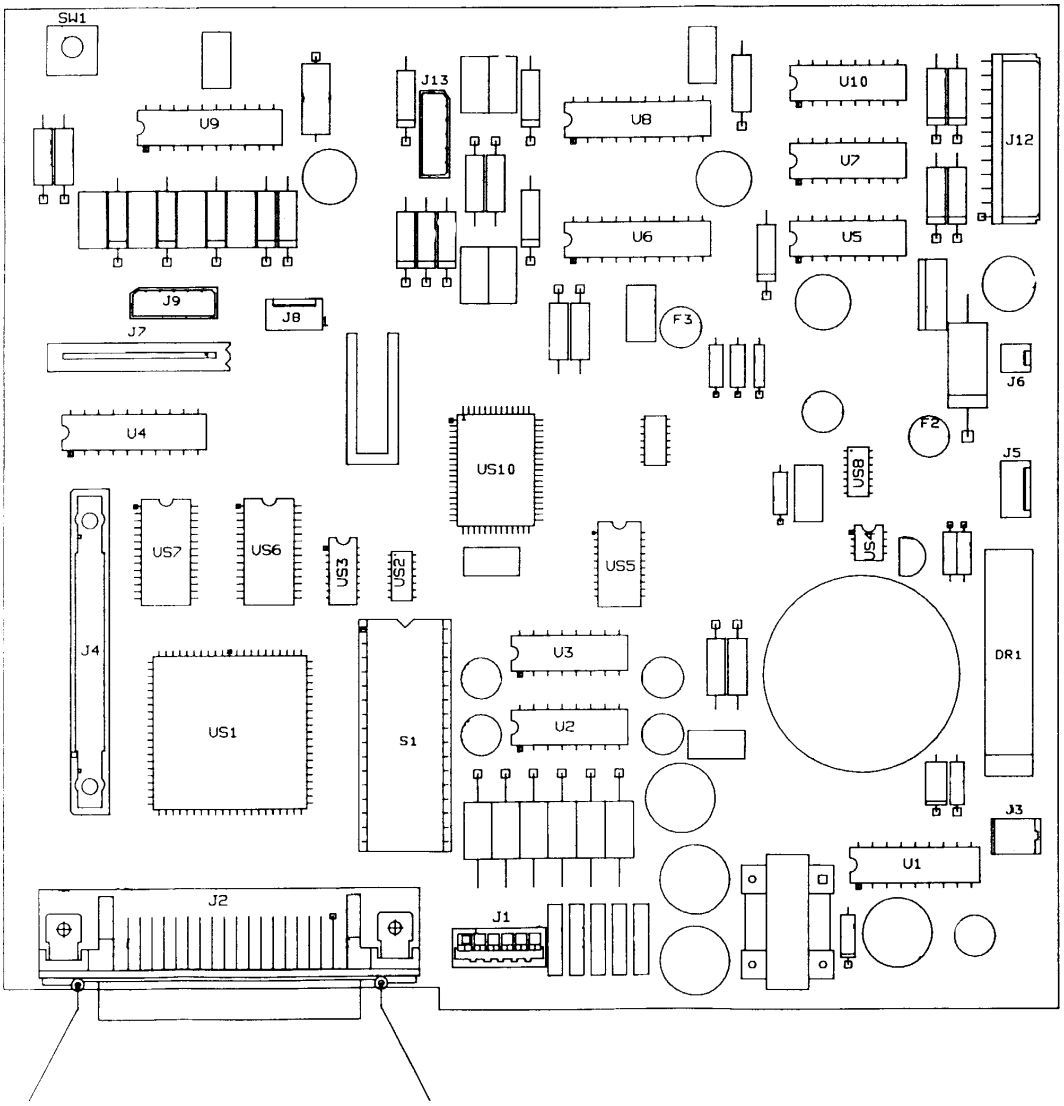

Connectors

J1	Serial Interface
J2	Centronics Interface
J3	AC Mains
J4	Memory Card
J5	Paper on platen photosensor
J6	Paper on sprocket microswitch
J7	Console
J8	Carriage reset photosensor
J9	Paper motor
J12	Printhead needles
J13	Carriage motor

Components

DR1	Rectifier Bridge
F2	3.15 A Fuse
F3	1.6 A Fuse
US1	Custom LOGO SPLCC
US2	EPROM 1 Kbit
US3	4D Flip Flop
US4	Display Driver
US5	Traspar. Latch
US6, US7	RAM 32 K
US8	LM339 Voltage Comparator
US10	78C10 CPU
U1	IC87 Power Switch Regulator
U2	Powered Dual RS-232 TX-RX
U3	Differential Line Receiver
U4	Display Driver
U5, U7, U10	Needle Darlington
U6, U8, U9	Step Motor Driver
SW1	Paper Feeding Selection Switch
S1	Firmware EPROM

D.4 “LOGO” Custom (84 PINS)

This custom concentrates in a single chip the main I/O and interface functions of the LA310 MultiPrinter.

The custom basic timing is the same used by the CPU and the data exchange between CPU and printer is carried out by the data bus and the address bus.

The functions of the custom are the following:

- **Testing the Memory Card insertion.**

  This function is performed by signals M-PRMCO-SECU1 which make a loop among pins 2, 1, 59 and 60 of the Memory Card when the latter is correctly inserted in the mother board connector.

  The ground signal applied to pin 2 passes through the loop and brings signal SECU1 low.

  If the Memory Card is wronly inserted the reset signal RESSA is generated.

- **Baud Rate generation.**

  It generates the transmission clock for the serial interface data. Signal TXCLK should have a different frequency depending on the line speed (150-9600 bps).

- **Address bus decoding.**

  The decoding of signals ADR13, 14, 15 selects the logic groups internal to the custom.

- **Data bus decoding.**

  This function is enabled by signal ALEAA (Address Latch Enable) and supplies the least significant address bus.

- **Handling the console local status.**

  When the local key is pressed and the printer is on line, signals CSLED (chip select of the console) and LED09 (Local LED switch on) are generated.

- **Timing of the E2PROM serial signals.**

  It generates signals CSEEP (E2PROM chip select) and CKEEP (serialization clock of E2PROM I/O data).

- **3 motor phase signal generation (paper).**

  It scans the sequence of FASA3, B3, C3, D3 signals which cause the clockwise/ counter-clockwise motion of the step motor.

- **DC motor driving.**

  Not used on LA 310.

- **2 motor phase signal generation (carriage transport).**

  It scans the sequence of FASA2, B2, C2, D2 signals which cause the clockwise/ counter-clockwise motion of the step motor.

- **1 motor phase signal generation.**

  Not used on LA 310.

- **EPROM-RAM memory addressing.**

  It generates signals CSEP1-CSEM1 (chip select of the basic EPROM and of the EPROM on the Memory Card), CSRA1-CSRM1 (chip select of the basic RAM and of the Memory Card of the RAM), APA13, 14, 15 (memory page address).

- **Italic, Double height, Superscripts, Subscripts character generation.**

  These types of printing are activated by means of special commands sent by the system.

- **Parallel Interface signal handling.**

  It transfers the character present on bus DACE0-7 each time it receives the ready character strobe STROB. It signals to the system the character received status and the conditions of printer busy, paper end, malfunction and printer selected.

D.4.1 "LOGO" Custom Block Diagram

FUNCTION	LEV.	SIGNAL
RESET	0	RESSA
NOT USED	0	Z
MEMORY CARD PRESENT AND CORRECTLY INSERTED	0	SECU1
SERIAL DATA TRANSMISSION CLOCK	⊓⊔	TXCLX
CLOCK CPU 15 MHz	⊓⊔⊓⊔	XTAL2
GENERAL RESET	0	RESEA
CHIP SELECT NEEDLE DRIVER	0	CSAGN
ADDRESS BUS	1/0	ADR15
	1/0	ADR14
	1/0	ADR13
READ STROBE	⊓⊔	READA
WRITE STROBE	⊓⊔	WRITA
ADDRESS LATCH	0	ALEAA
DATA BUS	1/0	DAAD0-7
ADDRESS BUS (LEAST SIGNIFICANT BYTE)	1	ADR00-7
LOCAL KEY	0	LOCAA
LOCAL LED SWITCH ON	0	LED09
CHIP SELECT DRIVER LED	0	CSLED
E2PROM CHIP SELECT	0	CSEEP
E2PROM DATA CLOCK	⊓⊔	CKEEP
PHASE A PAPER MOTOR ACTIVATION	0	FASA3
PHASE B PAPER MOTOR ACTIVATION	0	FASB3
PHASE C PAPER MOTOR ACTIVATION	0	FASC3
PHASE D PAPER MOTOR ACTIVATION	0	FASD3

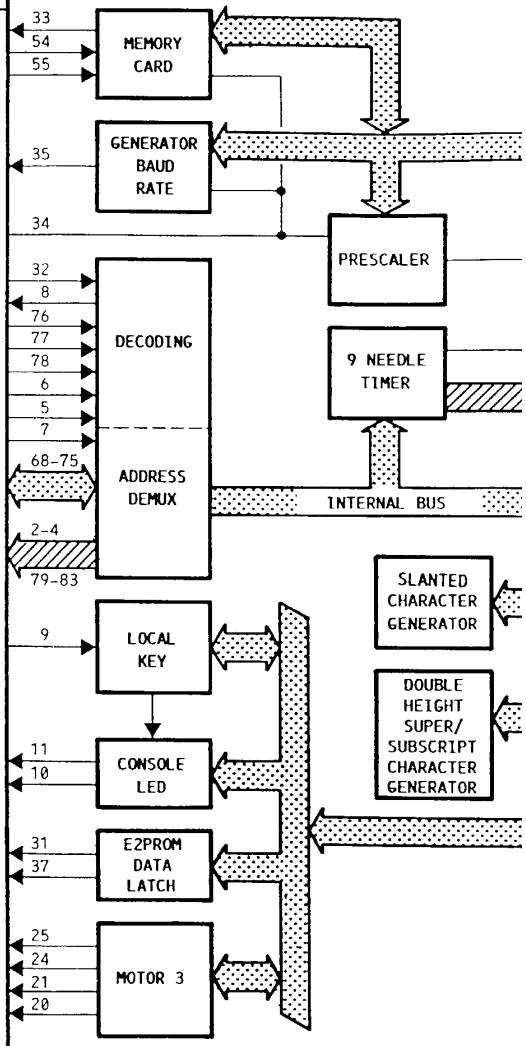

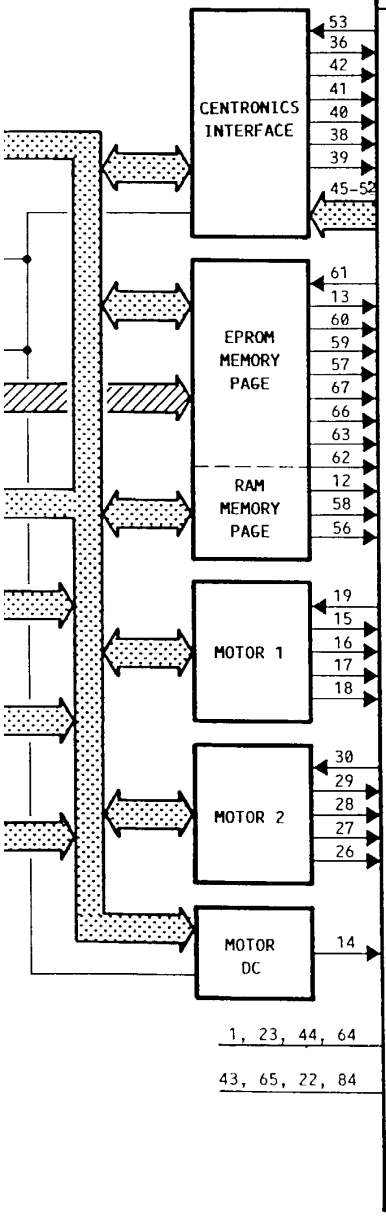

SIGNAL	LEV.	FUNCTION
STROB	0	CHARACTER STROBE
Z		NOT USED
ACKHN	0	CHARACTER RECEIVED STROBE
BUSY1	1	PRINTER BUSY
PAPE1	1	PAPER END
FAULN	0	MALFUNCTION SIGNAL
PSEL1	1	PRINTER SELECTED
DACE0-7	1/0	PARALLEL INTERFACE CHARACTER BYTE
MASSB	0	
CSEP1	1	BASIC E2PROM SELECTED
ENMOS	0	NEEDLE DRIVER SELECTED
CSEM1	1	MEMORY CARD E2PROM SELECTED
REAGA	0	NOT USED
APA13	1/0	
APA14	1/0	MEMORY ADDRESSING
APA15	1/0	
APA16	1/0	
CSRA1	0	BASIC RAM SELECTED
CSRM1	0	RAM MEMORY CARD SELECTED
AG009	1	NEEDLE 9 SELECTED
Z		NOT USED
Z		NOT USED
Z		NOT USED
Z		NOT USED
Z		NOT USED
CKMTR	⌐└┘	CARRIAGE TRANSPORT MOTOR CLOCK
FASA2	1	PHASE A CARRIAGE MOTOR SELECTION
FASB2	1	PHASE B CARRIAGE MOTOR SELECTION
FASC2	1	PHASE C CARRIAGE MOTOR SELECTION
FASD2	1	PHASE D CARRIAGE MOTOR SELECTION
Z		NOT USED
T	+5 V	STABILIZED LOGIC VOLTAGE
M	0 V	LOGIC GROUND

D.5 Schematics

D.5.1 BA 298 Logic and Memory

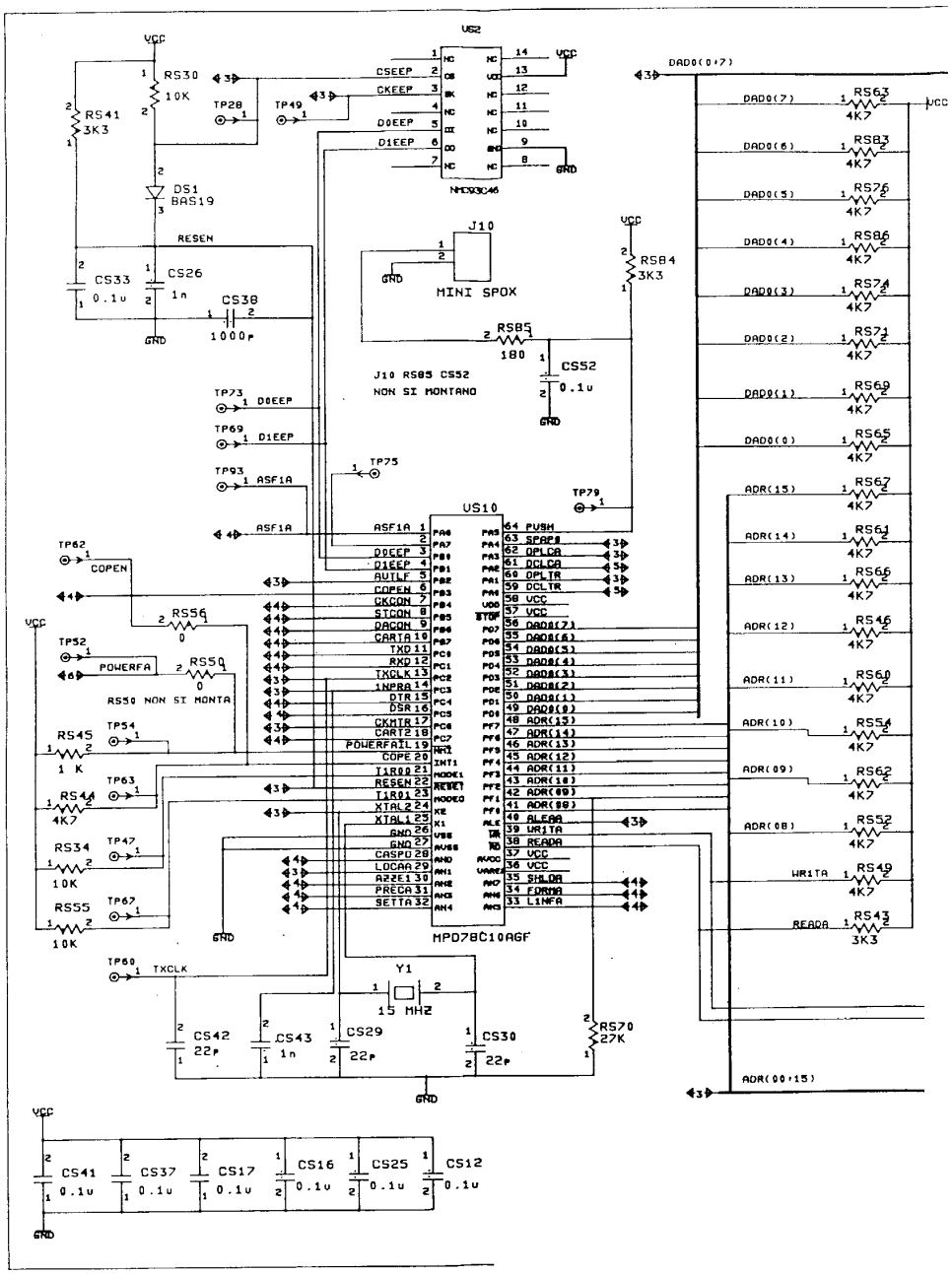

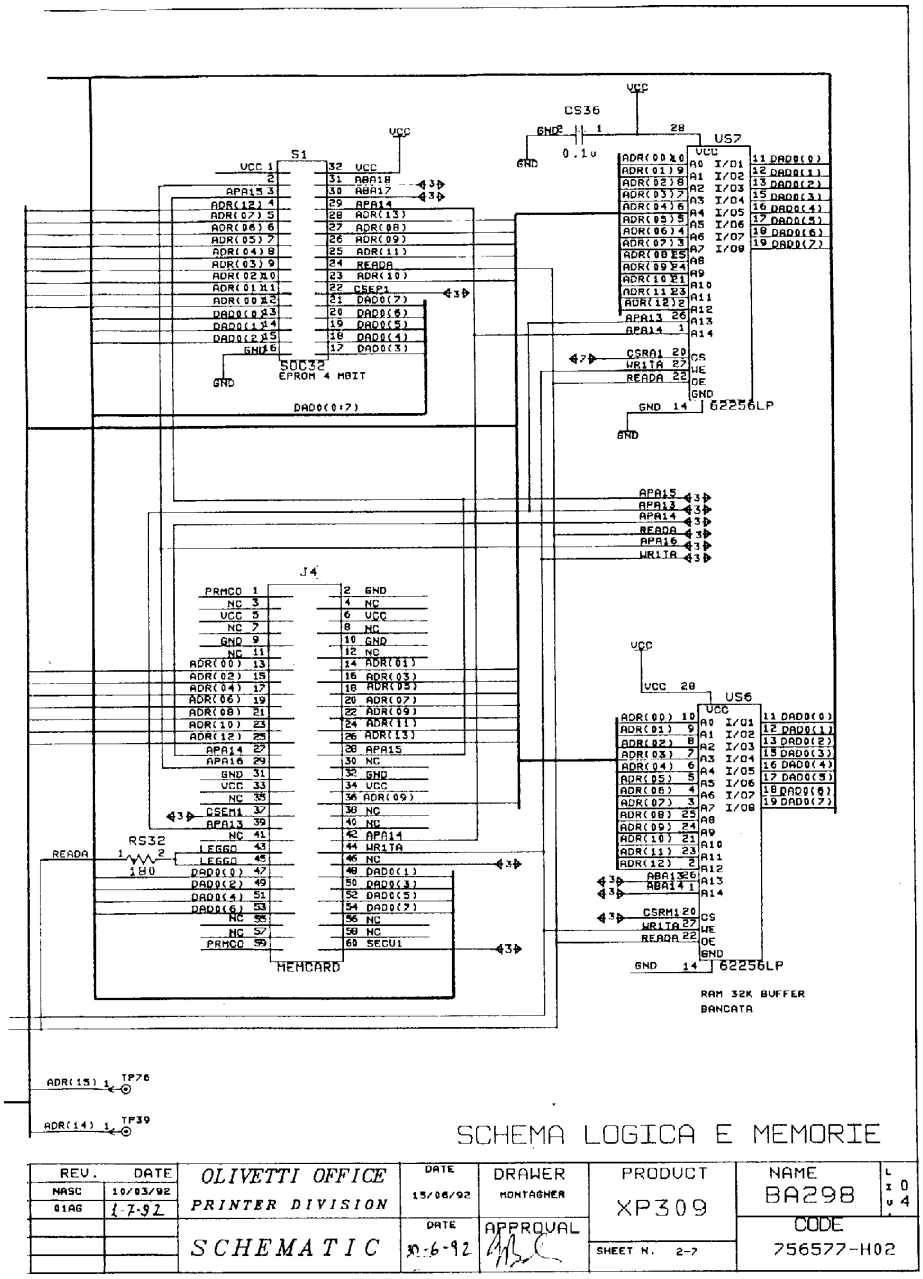
SCHEMA LOGICA E MEMORIE
OLIVETTI OFFICE
PRINTER DIVISION
SCHEMATIC
REV.
DATE
NASC
10/03/92
01AG
1-7-92
DATE
15/06/92
DRAWER
MONTAGNER
APPROVAL
PRODUCT
XP309
SHEET N. 2-7
NAME
BA298
CODE
756577-H02
62256LP
RAM 32K BUFFER
BANCATA
MEMCARD
EPROM 4 MBIT
S1
J4
US7
US6
CS36
RS32
TP76
TP39

D.5.2 BA 298 Custom and Centronics Interface

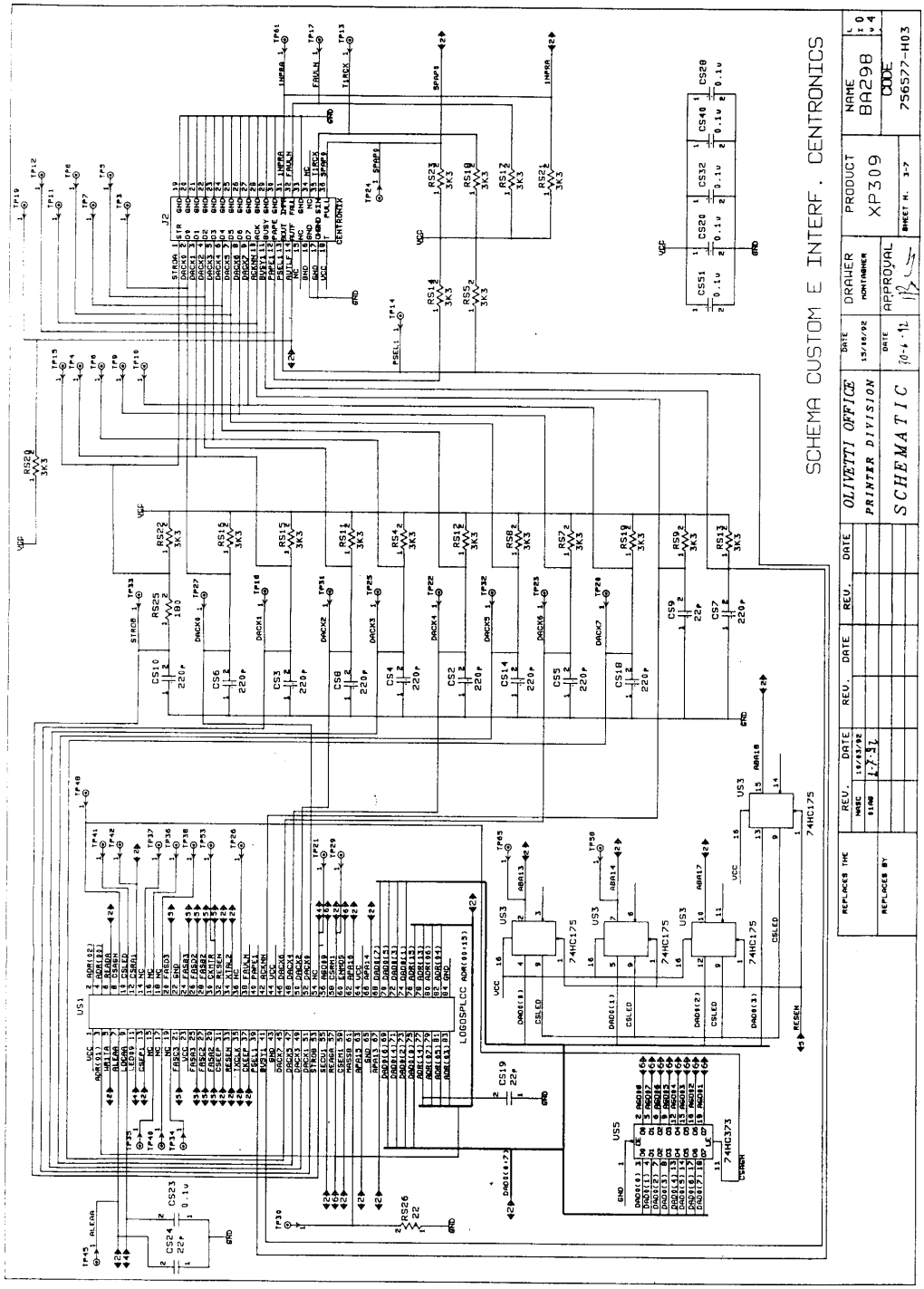

D.5.3 BA 298 Console and Serial Interface

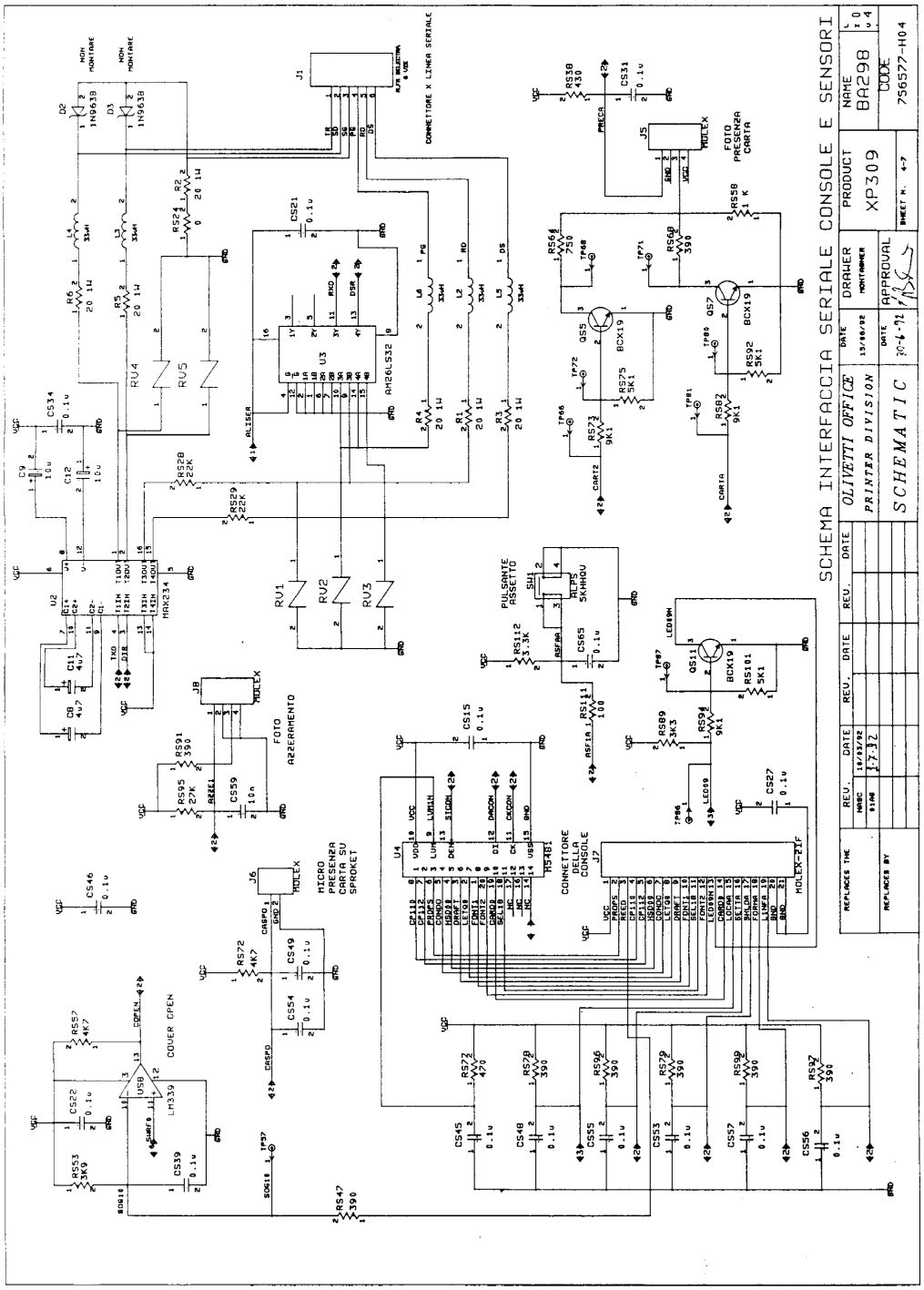

D.5.4 BA 298 Needle Drivers

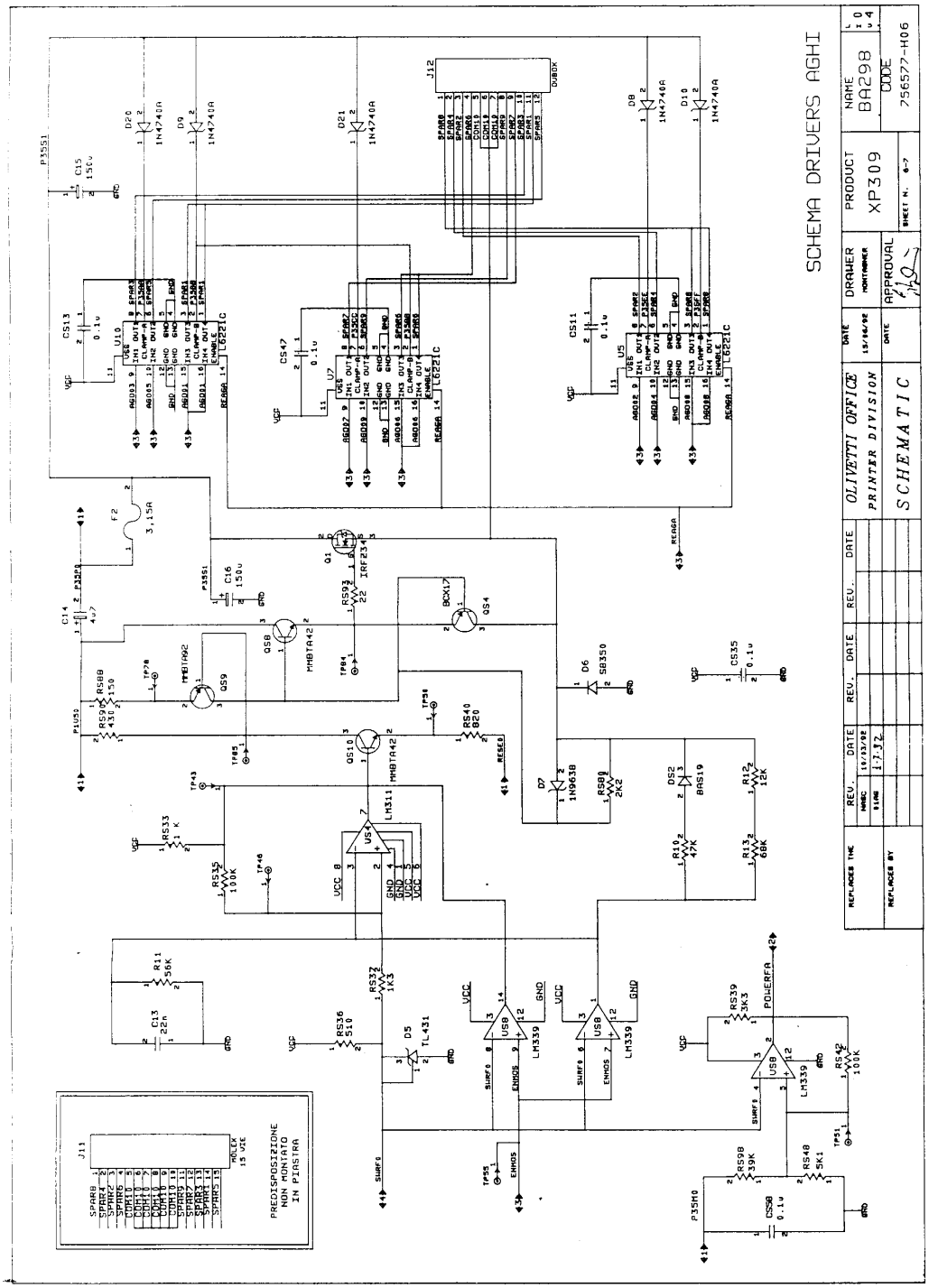

D.5.5 BA 298 Motor Drivers

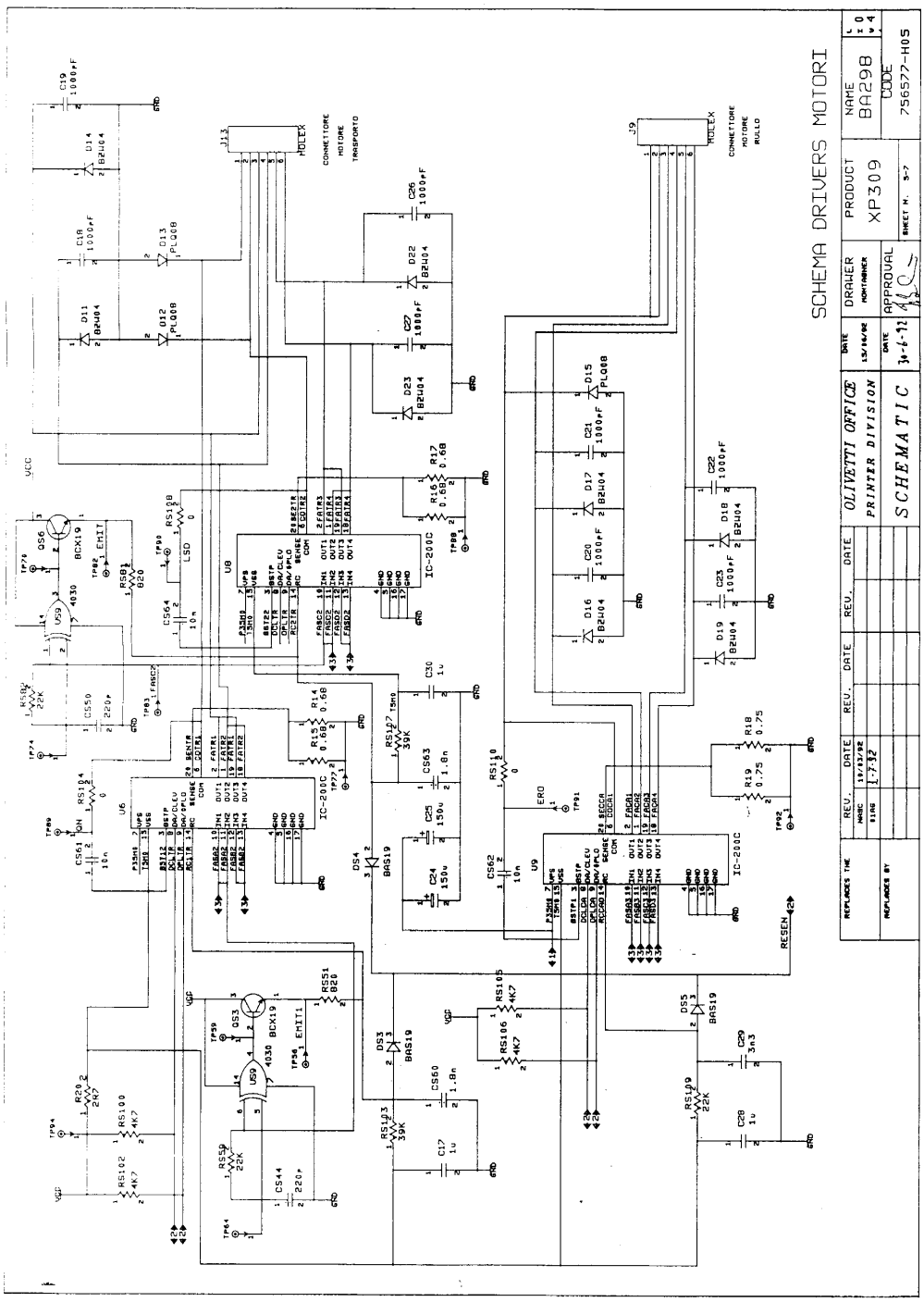

D.5.6 BA 298 Power Supply

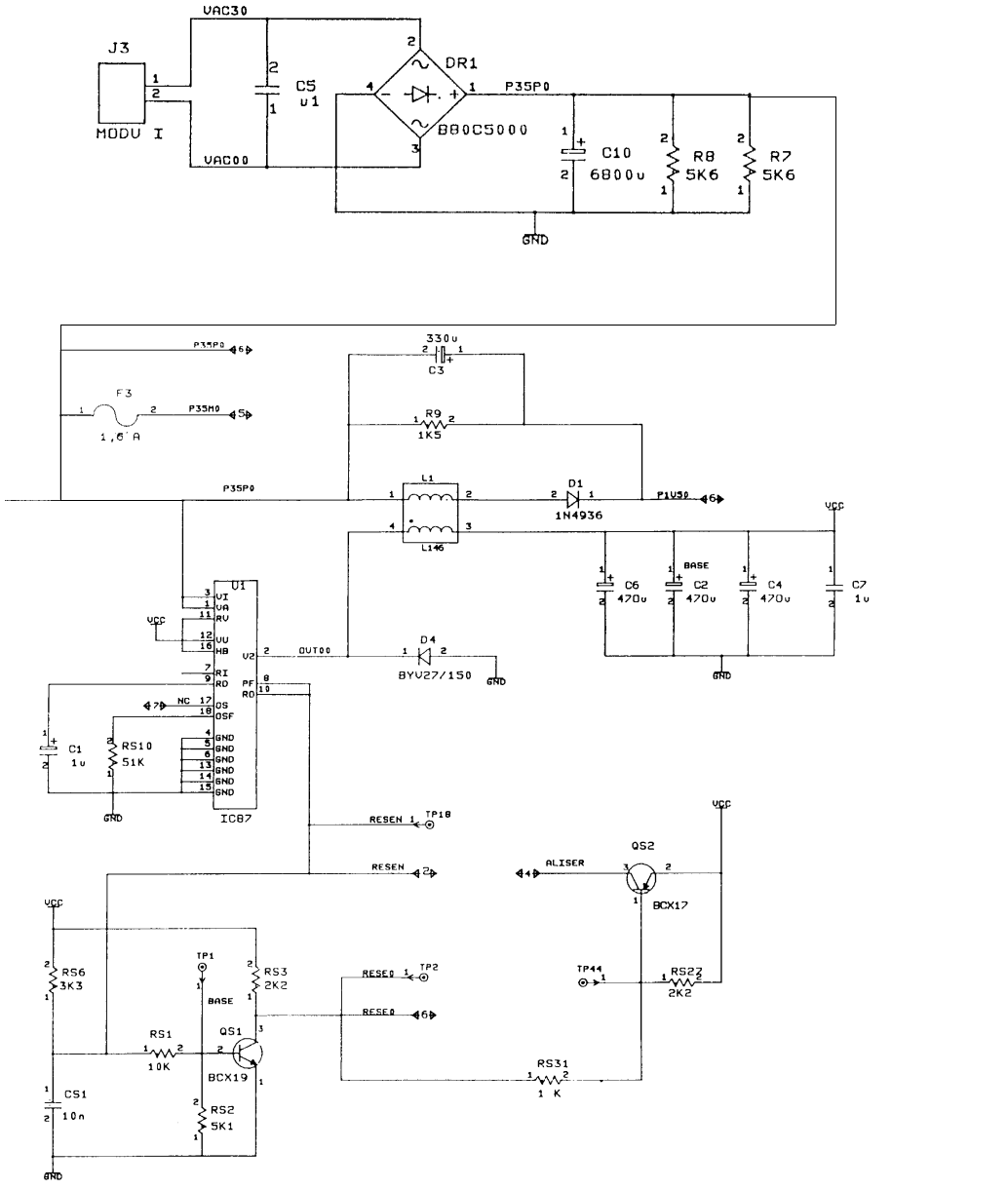

SCHEMA ALIMENTATORE

REV.	DATE	REV.	DATE	REV.	DATE	OLIVETTI OFFICE	DATE	DRAWER	PRODUCT	NAME
NASC	18/03/92					PRINTER DIVISION	15/06/92	MONTAGNER	XP309	BA298
01AG	1-7-92					SCHEMATIC	DATE	APPROVAL	SHEET N. 1-7	CODE 756577-H01

D.5.7 BA 298 Board Layout

LATO A

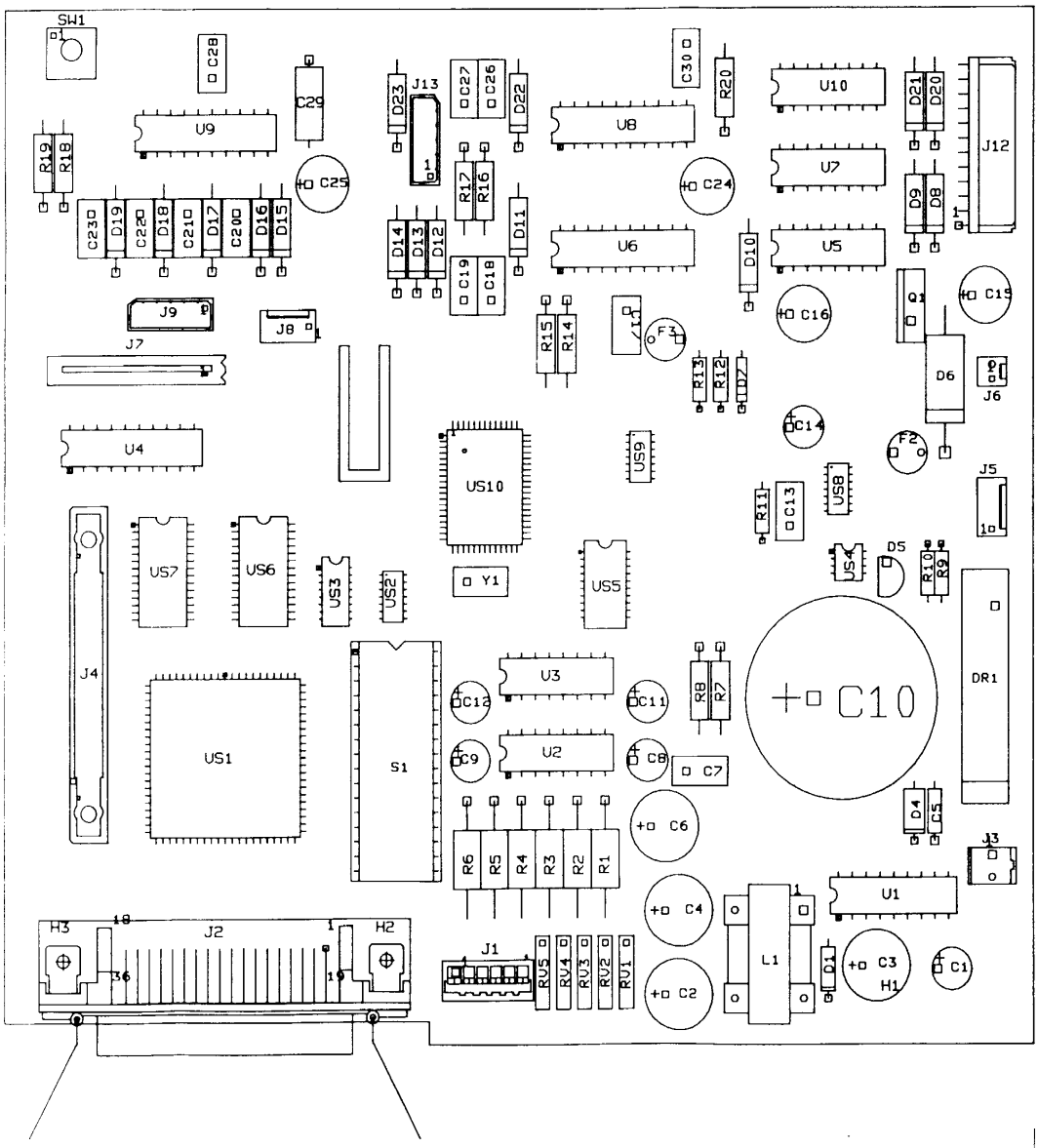

REV.	DATE		DATE	DRAWER	PRODUCT	NAME
INCA	10.3.92	OLIVETTI	30.6.92		XP309	BA298
01SO	01.7.92	PRINTER DIVISION			DEC	
		PCB	DATE 30.6.92	APPROVAL	SCALE / SIDE	CODE 7565771H

LATO B

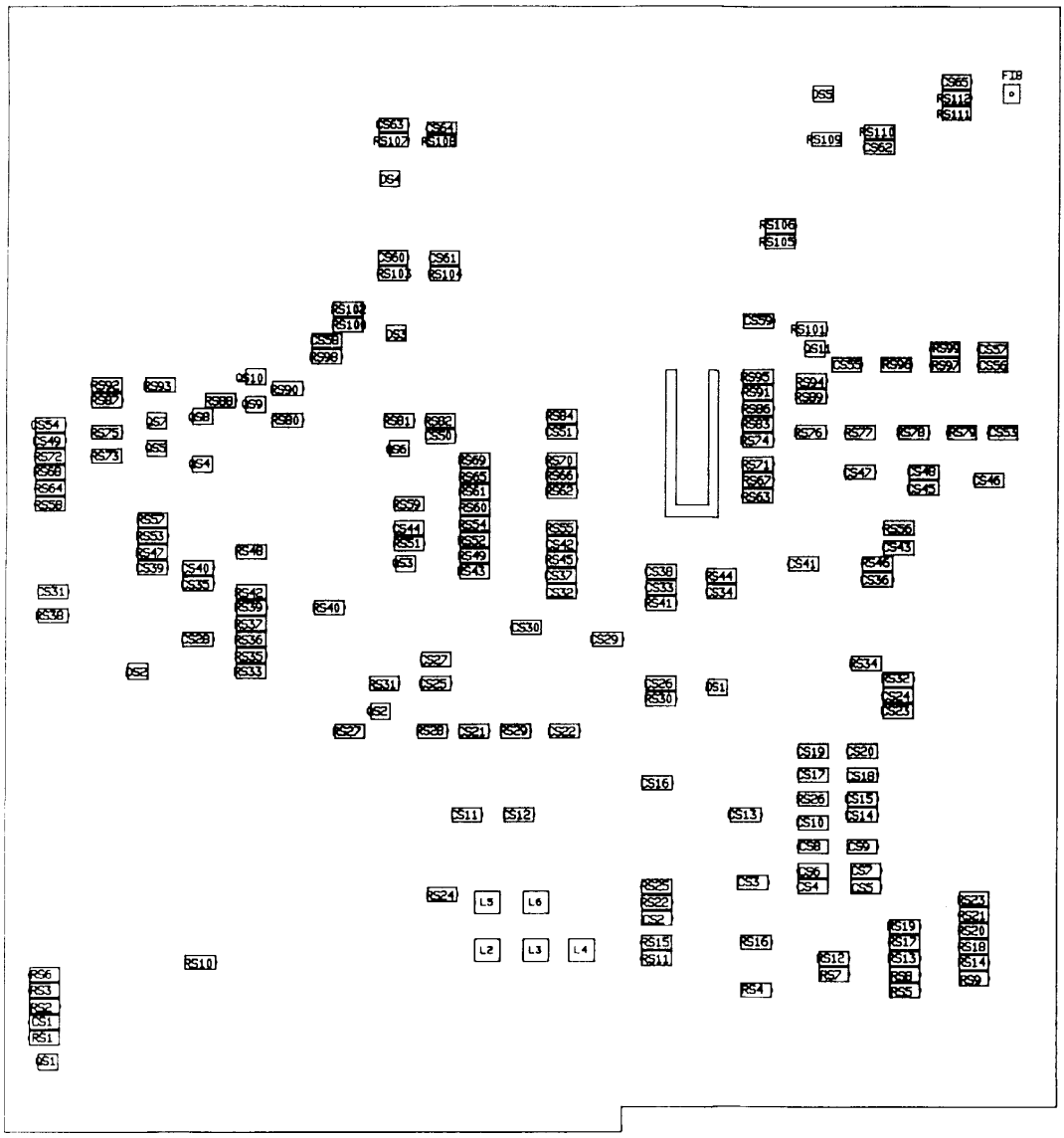

D.5.8 BA 298 Board Vendor Bill of Materials

Bill of Materials - ba298_01

Part Number		Qnty	Part Name	Part Description	Reference Designator
4800048S	D507	5	DS_BAS19	DIODD 200V 150MA RAD.V. SOT23 SMD	DS1-DS5
4800231N	D975	3	D_PLQ08	PLQ08 DIODE FAST 80V 1A	D12,D13,D15
4800400A	D127	1	D_1N4936	1N4936 FAST RETF.DIODE 400V 1A	D1
4801133U	D271	1	D_1N963B	1N963B DIODE ZENER 12V 0.4W	D7
4801308Y	D346	5	D_1N4740A	1N4740A DIODE ZENER 10V 1W	D8-D10,D20,D21
4804019Z	D188	1	D_SB350	SB350 DIODE SCHOTTKY 50V 3A	D6
4804233U	D198	1	D_BYV27/150	BYV27/150 FAST DIODE 150V 2A P400	D4
4835652U	DR35	1	DR_BB0C5000	BRIDGE 200V 5A BB0 C5000/3300	DR1
4846494B	Q499	1	Q_IRFZ34	MOSFET IRFZ34 30A 60V CAN.N	Q1
4848584U	QD1Y	1	QS_MMBTA92	TRANS.MMBTA92 PNP SMD	QS9
4849013U	Q70Z	2	QS_BCX17BA298	TRANS.BCX17 PNP SMD SOLO PER BA298	QS2,QS4
4849579M	Q06P	2	QS_MMBTA42	TRANS.MMBTA42 NPN SMD	QS8,QS10
4850098Y	Q69Z	6	QS_BCX19	TRANS. BCX19 NPN 0.5A 45V SOT23 SMD	QS1,QS3,QS5-QS7,QS11
4853056C	AMSJ	1	US_LM339	LM339 VOLTAGE COMPARATOR SMD	US8
4853821L	KQ22	3	UL_L6221C	L6261C 4DARL.SW.60V	U5,U7,U10
4856000A	VRN2	1	D_TL431C	TL431C DIODE ZENER TARAB.2.5-37V	D5
4858645Q	GA91	1	UCS_LOGO	CUSTOM LOGO SPLCC XP309(XP324)	US1
4859566Y	DHT7	1	US_74HC175	74HC175 4D FLIP FLOP SMD SO16	US3
4859567U	DKC7	1	US_74HC373	74HC373 8 TRASPAR.LATCH SMD	US5
4860633Y	LDRE	1	U_MAX234	POWERED DUAL RS-232 TX-RX	U2
4863470Y	LRPS	1	U_AM26LS32	QUAD. DIFFERENTIAL LINE RECEIVER	U3
4863588A	CS7L	1	UMS_78C10AGF	78C10AGF RQFP64 15MHZ MICROPROCESS.	US10
4863613F	AMSH	1	US_LM311	LM311 VOLTAGE COMPARATOR SMD	US4
4864222R	DDD4	1	UA_M5481	M5481 DISPLAY DRIVER	U4
4866029U	NXT3	1	US_4030	HCF4030 QUAD 2IMP SMD (SO14)	US9
4870928D	MRGX	2	US_62256LP-12	62256LP-12 RAM 32K X 8 120nS SMD	US6,US7
4877023F	D383	8	D_BZW04-85	BZW04-85 TRAN.VOLT.SUPPR.85.5V 400W	D11,D14,D16-D19,D22,D23
4884342X	CMAG	3	UL_IC200C	IC200C STEP MOTOR DRIVER	U6,U8,U9
4884344Q	CUUF	1	UL_IC87	IC87 LOW POWER SWICH REGULATOR	U1
4889061U	UCRM	1	Y_15MHZRIS	RISUONATORE CERAMICO 15 MHZ	Y1
4897236A	MPFD	1	US_NMC93C46	NMC93C46 EPROM 1KBIT SMD (SO14)	US2
4900000D	P02S	5	RS_0T5W0125	RES 0 OHMS 1/8 W 5% SMD	RS24,RS56,RS104,RS108,RS110
4900041W	R09X	2	RS_22T5W0125	RES 22 OHMS 1/8 W 5% SMD	RS26,RS93
4900084F	RX25	1	RS_100T5W0125	RES 100 OHMS 1/8 W 5% SMD	RS111
4900100W	R29W	1	RS_150T2W0125	RES 150 OHMS 1/8 W 2% SMD 1206B	RS88
4900108U	RX31	2	RS_180T5W0125	RES 180 OHMS 1/8 W 5% SMD 1206B	RS25,RS32
49001325	RX39	8	RS_390T5W0125	RES 390 OHMS 1/8 W 5% SMD	RS47,RS68,RS78,RS79,RS91,RS96,RS97,RS99
4900134K	R1SH	2	RS_430T5W0125	RES 430 OHMS 1/8 W 5% SMD	RS38,RS90
4900138L	RX41	1	RS_470T5W0125	RES 470 OHMS 1/8 W 5% SMD 1206B	RS77
4900140N	R42X	1	RS_510T5W0125	RES 510 OHMS 1/8 W 5% SMD	RS36
4900152U	R46X	1	RS_750T5W0125	RES 750 OHMS 1/8 W 5% SMD	RS64
4900156U	R47W	3	RS_820T2W0125	RES 820 OHMS 1/8 W 2% SMD 1206B	RS40,RS51,RS81
4900164N	RX49	4	RS_1KT5W0125	RES 1K OHMS 1/8W 5% SMD 1206B	RS31,RS33,RS45,RS58
49001838	RX57	3	RS_2K2T5W0125	RES 2,2K OHMS 1/8 W 5% SMD	RS3,RS27,RS80
4900196H	RX61	25	RS_3K3T5W0125	RES 3,3K OHMS 1/8 W 5% SMD	RS4-RS9,RS11-RS23,RS39,RS41,RS43,RS84,RS89,RS112
4900205S	R8ST	1	RS_3K9T2W0125	RES 3,9K OHMS 1/8 W 2% SMD	RS53
4900209T	RX65	24	RS_4K7T5W0125	RES 4,7K OHMS 1/8 W 5% SMD	RS44,RS46,RS49,RS52,RS54,RS57,RS60-RS63, RS65-RS67,RS69,RS71,RS72,RS74,RS76,RS83,RS86, RS100,RS102,RS105,RS106

4900215P	R66Y	5	RS_5K1T5W0125	RES 5,1K OHMS 1/8 W 5% SMD	RS2,RS48,RS75,RS92,RS101
4900243Z	R18U	3	RS_9K1T2W0125	RES 9,1 K OHMS 1/8 W 2% SMD	RS73,RS87,RS94
4900249K	RX73	4	RS_10KT5W0125	RES 10 K OHMS 1/8 W 5% SMD	RS1,RS30,RS34,RS55
4900269M	RXB1	5	RS_22KT5W0125	RES 22 K OHMS 1/8 W 5% SMD	RS28,RS29,RS59,RS82,RS109
4900274R	RW07	2	RS_27KT2W0125	RES 27 K OHMS 1/8 W 2% SMD	RS70,RS95
4900288T	R08U	3	RS_39KT2W0125	RES 39K OHMS 1/8 W 2% SMD 1206B	RS98,RS103,RS107
4900306G	RW10	1	RS_51KT2W0125	RES 51K OHMS 1/8 W 2% SMD	RS10
4900338Q	R97W	2	RS_100KT2W0125	RES 100K OHMS 1/8 W 2% SMD	RS35,RS42
4900474V	R0DU	1	RS_1K3T5W0125	RES 1K3 OHMS 1/8 W 5% SMD	RS37
4903505R	R0CK	1	R_12KT1W025	RES 12K OHMS 1/4 W 1%	R12
4903568G	R77P	1	R_56KT1W025	RES 56K OHMS 1/4 W 1%	R11
49090B4A	R9AG	4	R_R68T5W050	RES 0,68 OHM 1/2 W 5% P600	R14-R17
4909094B	RDAE	2	R_R75T5W050	RES 0.75 OHMS 1/2 W 5%	R18,R19
4911030J	R9AK	1	R_2R7T5W050	RES 2,7 OHMS 1/2 W 5% P600	R20
4911268F	R73C	2	R_5K6T5W050	RES 5,6K OHMS 1/2 W 5% P600	R7,R8
4924230B	R01F	1	R_1K5T5W025	RES 1.5K OHMS 1/4 W 5%	R9
4929151H	R406	6	R_20T10W1	RES 20 OHMS 1 W 10% P800	R1-R6
4985980Z	RT41	2	RV_G180K	VARISTORE 180K 16V	RV4,RV5
4985981S	RT42	3	RV_G220K	VARISTORE 220K 24V	RV1-RV3
4903576Q	R97P	1	R_68KT1W025	RES 68K OHMS 1/4 W 1%	R13
4904324L	RMFM	1	R_47KT1W025	RES 47K OHMS 1/4 W 1%	R10
5000704J	C840	1	C_22nV63T125FR	CAP.FILM 22 nF V 63 T 1.25 FILM RA	C13
5006470P	C031	1	C_3n3V63T5F	CAP. 3.3nF V63 T5 CERAMICO	C29
5053349Z	C727	3	C_470uV16T10100E	CAP.EL. 470 UF V 16 T-10+100	C2,C4,C6
5053603V	C717	3	C_4u7V25T1050ER	CAP. 4.7uF V25 T-10+50 RADIALE	C8,C11,C14
5053605N	C801	2	C_10uV25T20ER	CAP. 10 uF V25 T20 ELETTR.NASTR.RAD	C9,C12
5053629D	C726	1	C_330uV25T20E	CAP.EL. 330 UF V 25 T 20	C3
5056344Z	C813	4	C_150uV50T1050E	CAP.EL. 150 UF V 50 T-10+50	C15,C16,C24,C25
5056446K	COOG	1	C_6800uV50T20E	CAP.EL. 6800UF V 50 T 20	C10
5057801B	C833	1	C_1uV63T20ER	CAP. 1 uF V63 T20 ELETTR.NASTR.RAD.	C1
5070013G	CX94	6	CS_22pV25T5	CAP. 22pF V25 T5 SMD 1206B	CS9,CS19,CS24,CS29,CS30,CS42
5070048Z	CXSN	12	CS_220pV50T5	CAP. 220pF V50 T5 SMD 1206B CERAMIC	CS2-CS8,CS10,CS14,CS18,CS44,CS50
5070073E	COMX	2	CS_1nV25T5	CAP. 1nF V25 T5 SMD 1206B	CS26,CS43
5070075X	CXAB	1	CS_1000pV50T10	CAP. 1000 PF V50 T10 SMD 1206B	CS38
5070082K	CXAF	2	CS_1nBV25T5	CAP. 1.8 nF V25 T5 SMD 1206B	CS60,CS63
5070110Q	CXDH	5	CS_10nV25T10	CAP. 10 nF V25 T10 SMD 1206B	CS1,CS59,CS61,CS62,CS64
5070144R	CX36	35	CS_u1V25T2080	CAP. 0.1 UF V25 T-20+80 SMD 1206B	CS11-CS13,CS15-CS17,CS20-CS23,CS25,CS27,CS28, CS31-CS37,CS39-CS41,CS45-CS49,CS51,CS53-CS57,CS65
5070148J	CXAE	1	CS_u1V50T2080	CAP. 0.1 UF V50 T-20+80 SMD 1206B	CS58
5070715W	C955	1	C_u1V50T10C	CAP.CER. 0.1 UF V 50 T 10	C5
5070755S	C710	4	C_10uV50T2080C	CAP.CER. 1 UF V 50 T-20+80	C7,C17,C28,C30
5074904Y	C866	8	C_1nV500T10C	CAP.CER. 1 nF V500 T 10	C18-C23,C26,C27
5092242R	L245	5	L_33uH	IND.33uH 50MHz SMD	L2-L6
5111026S	TS1T	1	SW_AL5KHHQV	ALPS 5 PINS CONTACT SWITCH	SW1
5373719V	PF2N	1	F_3A15V125R	FUSE 3.15A RIT N R	F2
5373769S	PF2M	1	F_1A6V125	FUSE 1,6 A .NR	F3
5775451S	POLE	1	S_SOCDIP32	SOCKET DIP32 P600	S1
5782130D	J708	1	J_MD6VMDBMSPOX	MOLEX 6 VIE M.D.MINISPOX BIANCO	J9
5782158E	J965	1	J_MD6VMDNMSPOX	MOLEX 6 VIE M.D.MINI SPOX NERO	J13
5782420J	J01J	1	J_DU12VMPTIP	DUPON 12X1V M 90G TIP-DUBOX	J12
5783790T	J10K	1	J_MD21VFD2IF	MOLEX-ZIF 21V FEM.DIR.	J7
5785206K	J404	2	J_MD4VMDS	MOLEX 4 VIE M.DIR.P2.54 STANDARD	J5,J8
5785363A	J93R	1	J_ALSEL6VFD	CONN.ALFA SELECTRA 6VIE F.DIR.	J1
5785738D	J477	1	J_MD2VMDS	MOLEX 2 VIE M.DIR.P2.54 STANDARD	J6
5785926G	J265	1	J_AM2VMDSMODUI	AMP 2 VIE M.DIR.P2.54 MODU I	J3
5788041G	J10F	1	J_DU60VMDMEMCARD	DUPON 60V M.D.X MEMORY-CARD	J4
5788098K	J83D	1	J_CX18X2VFPSV	CENTRONIX 18X2 FEM. 90 GRADI SENZA V	J2
725235T	L146	1	L_146	INDUT.270MH T=5/15	L1
728969N		1		MOLLINA PER CONNETTORE CENTRONICS	
167003Y		1		TARGHETTA DATI PIASTRA	
7565766	L.03	1		CIRCUITO STAMPATO BA298	
756577H-01			01AG	SCHEMA ALIMENTATORE	
756577H-02			01AG	SCHEMA CPU E MEMORIE	
756577H-03			01AG	SCHEMA CUSTOM LOGO E INT. CX	
756577H-04			01AG	SCHEMA INTERF. SERIALE E SENSORI	
756577H-05			01AG	SCHEMA DRIVERS MOTORI	
756577H-06			01AG	SCHEMA DRIVERS AGHI	