HSG80 Array Controller ACS Version 8.3 and 8.4

Maintenance and Service Guide

First Edition (April 1999)
Part Number EK-HSG84-SV. A01/118629-001
Compaq Computer Corporation

While Compaq Computer Corporation believes the information included in this publication is correct as of the date of publication, it is subject to change without notice.

Compaq Computer Corporation makes no representations that the interconnection of its products in the manner described in this document will not infringe existing or future patent rights, nor do the descriptions contained in this document imply the granting of licenses to make, use, or sell equipment or software in accordance with the description.

Copyright © Digital Equipment Corporation 1999

All rights reserved.
Printed in U.S.A.

Compaq, the Compaq logo, and the Digital logo are registered with the United States Patent and Trademark office.

DIGITAL, StorageWorks, the StorageWorks logo, and Tru64 are trademarks of Compaq Computer Corporation.

UNIX is a registered trademark in the United States and other countries licensed exclusively through X/Open Company Ltd.

Microsoft, Windows, and Windows NT are registered trademarks of Microsoft Corporation.

Intel is a trademark of Intel Corporation.

All other trademarks and registered trademarks are the property of their respective owners.

Contents

About this Guide

Getting Help. xv

  Compaq Website. xv

  Telephone Numbers xv

Precautions. xvi

  Electrostatic Discharge Precautions xvi

  Component Precaution xvi

  Maintenance Port Precautions xvii

  FCC Precautions. xvii

Conventions xix

  Typographical Conventions xix

  Special Notices. xx

Required Tools. xxi

Related Publications xxii

Revision History xxiii

Chapter 1
General Description

HSG80 Array Controller 1–4

Cache Module 1–6

Fibre Channel Switch 1–7

Environmental Monitoring Unit (EMU) 1–9

Chapter 2
Replacement Procedures

Preparation Procedures 2–3

  Establishing a Local Connection to the Controller. 2–3

Fibre Channel Optical Cable Cleaning Instructions 2–6
Cleaning the GLM 2–7
Shutting Down the Subsystem 2–8
    Disabling and Enabling the External Cache Batteries 2–8
Restarting the Subsystem 2–10
Replacing Modules in a Single-Controller Configuration 2–11
    Replacing a Controller and Cache Module in a Single-Controller Configuration 2–12
    Replacing a Controller in a Single-Controller Configuration 2–12
    Replacing a Cache Module in a Single-Controller Configuration 2–16
Replacing Modules in a Dual-Redundant Controller Configuration 2–19
    Replacing a Controller and Cache Module in a Dual-Redundant Controller Configuration 2–20
    Replacing a Controller in a Dual-Redundant Controller Configuration 2–28
    Replacing a Cache Module in a Dual-Redundant Controller Configuration 2–34
Replacing an External Cache Battery Storage Building Block 2–41
    Replacing an External Cache Battery Storage Building Block With Cabinet Powered On 2–42
    Replacing an External Cache Battery Storage Building Block With Cabinet Powered Off 2–43
Replacing a Gigabit Link Module (GLM) 2–46
Replacing a PVA Module 2–49
Replacing an I/O Module 2–52
Replacing an EMU 2–56
    Removing an EMU 2–56
    Installing an EMU 2–57
Replacing DIMMs 2–58
    Removing DIMMs 2–59
    Installing DIMMs 2–59

Replacing a Fiber Cable, Switch, or Hub 2–61
Replacing a PCMCIA Card 2–62
Replacing a Failed Storageset Member 2–64
    Removing a Failed RAIDset or Mirrorset Member 2–64
    Installing the New Member 2–65

Chapter 3
Upgrading the Subsystem

Upgrading Controller Software 3–2
    Installing a New Program Card 3–3
    Downloading New Software. 3–4
    Using CLCP to Install, Delete, and List Software Patches 3–8
Upgrading Firmware on a Device 3–14
Upgrading to a Dual-Redundant Controller Configuration 3–17
    Installing a New Controller, Cache Module, and ECB 3–17
Upgrading Cache Memory 3–22

Chapter 4
Troubleshooting

Running the Controller’s Diagnostic Test 4–2
    Charging Diagnostics 4–2
Troubleshooting Checklist. 4–4
Troubleshooting Table 4–6
    Fault-Tolerance for Write-Back Caching 4–18
Significant Event Reporting. 4–25
    Events that cause controller termination 4–25
    Events that do not cause controller operation to terminate 4–34
Utilities and Exercisers 4–37
    Fault Management Utility. 4–37

Using VTDPY to Check for Communication Problems 4–44
Disk Inline Exerciser (DILX). 4–59
Configuration Utility 4–64
HSUTIL 4–65
Code Load and Code Patch Utility. 4–66
Clone Utility 4–67
Field Replacement Utility. 4–67
Change Volume Serial Number Utility. 4–68
Device Statistics Utility 4–68

Chapter 5
Event Reporting: Templates and Codes

Passthrough Device Reset Event Sense Data Response 5–2
  Last Failure Event Sense Data Response 5–3
  Multiple-Bus Failover Event Sense Data Response. 5–5
  Failover Event Sense Data Response 5–7
  Nonvolatile Parameter Memory Component Event Sense Data Response . . . 5–9
  Backup Battery Failure Event Sense Data Response 5–11
  Subsystem Built-In Self Test Failure Event Sense Data Response 5–13
  Memory System Failure Event Sense Data Response 5–15
  Device Services Non-Transfer Error Event Sense Data Response. 5–16
  Disk Transfer Error Event Sense Data Response 5–18
  Data Replication Manager Services Event Sense Response 5–20
Instance Codes. 5–22
  Instance Code Structure 5–22
  Instance Codes and FMU 5–22
Last Failure Codes. 5–53
  Last Failure Code Structure 5–53
  Last Failure Codes and FMU 5–53

Recommended Repair Action Codes. 5–102
Component Identifier Codes 5–109
Event Threshold Codes 5–111
ASC/ASCQ Codes. 5–112

Chapter 6
Connectors, Switches, and LEDs

Controller Front Panel 6–2
Operator Control Panel LEDs 6–3
Gigabit Link Module (GLM) Connectors 6–4
Power Verification and Addressing Module 6–6
Environmental Monitoring Unit (EMU) 6–7

Chapter 7
Controller Specifications

Physical and Electrical Specifications for the Controller 7–2
Environmental Specifications 7–3

Spare Part Number Cross Reference

System Components Exploded View. A–2
HSG80 Array Controller A–4
Cache Module A–6
Fibre Channel Switch A–7
Environmental Monitoring Unit (EMU) A–9

Glossary

Index

Figures

The HSG80 Subsystem 1–2
HSG80 Array Controller–Fibre Channel Optical Cabling 1–4
Cache Module 1–6
Switch Components 1–7
EMU 1–9
PC/Terminal to Maintenance Port Connection 2–4
Ferrule on an Optical Cable 2–6
Cleaning Procedure for GLM 2–7
ECB SBB Battery Disable Switch Location 2–9
Single-Controller Configuration 2–11
Dual-Redundant Controller Configuration 2–19
ECB SBB Configuration 2–41
Location of GLMs in Controller 2–46
I/O Module Locations in a BA370 Enclosure 2–52
I/O Module Locations 2–53
Cache-Module Memory Configurations 2–58
DIMM Components 2–60
PCMCIA Card 2–62
PCMCIA Card 3–2
Location of Write-Protection Switch 3–5
Upgrading Device Firmware 3–14
Cache-Module Memory Configurations 3–22
DIMM Components 3–24
Xfer Rate Region of the Default Display 4–46
Regions on the Device Display 4–47
Unit Status on the Cache Display 4–51
Fibre Channel Host Status Display 4–54

Passthrough Device Reset Event Sense Data Response Format 5–2
Template 01—Last Failure Event Sense Data Response Format 5–4
Template 04—Multiple-Bus Failover Event Sense Data Response Format 5–6
Template 05—Failover Event Sense Data Response Format 5–8
Template 11—Nonvolatile Parameter Memory Component Event Sense Data Response Format 5–10
Template 12—Backup Battery Failure Event Sense Data Response Format 5–12
Template 13—Subsystem Built-In Self Test Failure Event Sense Data Response Format 5–14
Template 14—Memory System Failure Event Sense Data Response Format . . . 5–15
Template 41—Device Services Non-Transfer Error Event Sense Data Response Format 5–17
Template 51—Disk Transfer Error Event Sense Data Response Format 5–19
Template 90—Data Replication Manager Services Event Sense Data Response Format 5–21
Structure of an Instance Code 5–22
Instance Code Format 5–22
Structure of a Last Failure Code 5–53
Last Failure Code Format 5–53
Controller Front Panel Connectors, Switches, and LEDS 6–2
Operator Control Panel Switches and LEDs 6–3
GLM Connectors 6–4
PVA Module Connectors and Switches 6–6
EMU Connectors, Switches, and LEDs 6–7
The HSG80 Subsystem A–2
HSG80 Array Controller–Fibre Channel Optical Cabling A–4
Cache Module A–6
Switch Components A–7
EMU A–9

Tables

The HSG80 Subsystem 1–3
HSG80 Fibre Channel Array Controller 1–5
Cache Module 1–6
Fibre Channel Switch 1–8
EMU 1–9
Description of PC/Terminal to Maintenance Port Connection 2–5
Description of ECB SBB Battery Disable Switch 2–9
Description of Single-Controller Configuration 2–11
Description of Dual-Redundant-Controller Configuration 2–19
ECB SBB Configuration 2–41
Description of the Gigabit Link Module (GLM) 2–47
Description of I/O Modules in a BA370 Enclosure 2–52
Cache Module Memory Configurations 2–58
DIMM Components 2–60
PCMCIA Card 2–62
PCMCIA Card 3–2
Cache Module Memory Configurations 3–22
DIMM Components 3–24
Troubleshooting Table 4–6
Cache Policies and Cache Module Status 4–19
Resulting Cache Policies and ECB Status 4–21
Flashing OCP Patterns 4–26
Solid OCP Patterns 4–28
Event-Code Types 4–40
FMU SET Commands 4–42
VTDPY Key Sequences and Commands 4–45
Device Map Columns 4–48

Device Status Columns 4–49
Device-Port Status Columns 4–50
Unit Status Columns 4–51
Fibre Channel Host Status Display- Known Hosts (Connections) 4–55
Fibre Channel Host Status Display- Port Status 4–56
Fibre Channel Host Status Display-
Link Error Counters 4–56
First Digit on the TACHYON Chip 4–58
Second Digit on the TACHYON Chip 4–58
DILX Control Sequences 4–60
Data Patterns for Phase 1: Write Test 4–62
DILX Error Codes 4–64
HSUTIL Messages and Inquiries 4–65
Instance Codes 5–24
Controller Restart Codes 5–54
Last Failure Codes 5–55
Recommended Repair Action Codes 5–102
Component Identifier Codes 5–109
Event Notification/Recovery Threshold Classifications 5–111
ASC and ASCQ Codes 5–112
Controller Front Panel Connectors, Switches, and LEDs 6–2
Operator Control Panel Switches and LEDs 6–3
GLM Connectors 6–5
PVA Connectors and Switches 6–6
EMU Connectors, Switches, and LEDs 6–7
Controller Specifications 7–2
Optimum Operating Environmental Specifications 7–3
Maximum Operating Environmental Specifications 7–4
Maximum Nonoperating Environmental Specifications 7–4

The HSG80 Subsystem A–3
HSG80 Fibre Channel Array Controller A–5
Cache Module A–6
Fibre Channel Switch A–8
EMU A–9

About this Guide

This book describes the features and part numbers of the HSG80 array controller running Array Controller Software (ACS) Version 8.3G, 8.4F, and 8.4P. It also contains procedures for replacement, upgrading the subsystem, and troubleshooting, as well as providing event reporting codes used during troubleshooting.

This book does not contain information about the operating environments to which the controller may be connected, nor does it contain detailed information about subsystem enclosures or their components. See the documentation that accompanied these peripherals for information about them.

Getting Help

If you have a problem and have exhausted the information in this guide, you can get further information and other help in the following locations.

Compaq Website

The Compaq Website has information on this product as well as the latest drivers and Flash ROM images. You can access the Compaq website by logging on to the Internet at http://www.compaq.com.

Telephone Numbers

For Compaq support:

In the United States and Canada, call 1-800-354-9000.

For Compaq technical support phone numbers outside the United States and Canada, visit the Compaq Website at: http://www.compaq.com.

Precautions

Follow these precautions when carrying out the procedures in this book.

Electrostatic Discharge Precautions

Static electricity collects on all nonconducting material, such as paper, cloth, and plastic. An electrostatic discharge (ESD) can easily damage a controller or other subsystem component even though you may not see or feel the discharge. Follow these precautions whenever you're servicing a subsystem or one of its components:

- Always use an ESD wrist strap when servicing the controller or other components in the subsystem. Make sure that the strap contacts bare skin, fits snugly, and that its grounding lead is attached to a bus that is a verified earth ground.
- Before touching any circuit board or component, always touch a verifiable earth ground to discharge any static electricity that may be present in your clothing.
- Always keep circuit boards and components away from nonconducting material.
- Always keep clothing away from circuit boards and components.
- Always use antistatic bags and grounding mats for storing circuit boards or components during replacement procedures.
- Always keep the ESD cover over the program card when the card is in the controller. If you remove the card, put it in its original carrying case. Never touch the contacts or twist or bend the card while you're handling it.
- Never touch the connector pins of a cable when it is attached to a component or host.

Component Precaution

System components referenced in this manual comply to regulatory standards documented herein. Use of other components in their place may violate country standards, negate regulatory compliance, or invalidate the warranty on your product.

Maintenance Port Precautions

The maintenance port generates, uses, and radiates radio-frequency energy through cables that are connected to it. This energy may interfere with radio and television reception. Do not leave a cable connected to this port when you’re not communicating with the controller.

FCC Precautions

This equipment has been tested and found to comply with the limits for a Class A digital device, pursuant to Part 15 of the FCC Rules. These limits are designed to provide reasonable protection against harmful interference when the equipment is operated in a commercial environment. This equipment generates, uses and can radiate radio frequency energy and, if not installed and used in accordance with the manuals, may cause harmful interference to radio communications. Operation of this equipment in a residential area is likely to cause harmful interference in which case the user will be required to correct the interference at his own expense. Restrictions apply to the use of the local-connection port on this series of controllers; failure to observe these restrictions may result in harmful interference. Always disconnect this port as soon as possible after completing the setup operation. Any changes or modifications made to this equipment may void the user's authority to operate the equipment.

Warning!
This is a Class A product. In a domestic environment this product may cause radio interference in which case the user may be required to take adequate measures.

Achtung!
Dieses ist ein Gerät der Funkstörgrenzwertklasse A. In Wohnbereichen können bei Betrieb dieses Gerätes Rundfunkstörungen auftreten, in welchen Fällen der Benutzer für entsprechende Gegenmaßnahmen verantwortlich ist.

Attention!
Ceci est un produit de Classe A. Dans un environnement domestique, ce produit risque de créer des interférences radioélectriques, il appartiendra alors à l'utilisateur de prendre les mesures spécifiques appropriées.

JAPAN

の装置は，情報処理装置等電波障害自主規制協議会（ＶＣＣＩ）の
づくクラスＡ情報技術装置です。この装置を家庭環境で使用すると
を引き起こすことがあります。この場合には使用者が適切な対策を
う要求されることがあります。

USA

This equipment generates, uses, and may emit radio frequency energy. The equipment has been type tested and found to comply with the limits for a Class A digital device pursuant to Part 15 of FCC rules, which are designed to provide reasonable protection against such radio frequency interference. Operation of this equipment in a residential area may cause interference in which case the user at his own expense will be required to take whatever measures may be required to correct the interference. Any modifications to this device - unless expressly approved by the manufacturer - can void the user’s authority to operate this equipment under part 15 of the FCC rules.

Conventions

This book uses the following typographical conventions and special notices to help you find what you're looking for.

Typographical Conventions

Convention	Meaning
ALLCAPS	**Command syntax that must be entered exactly as shown and for commands discussed within text, for example:** SET FAILOVER COPY=OTHER_CONTROLLER "Use the SHOW SPARESET command to show the contents of the spareset."
`Monospaced`	**Screen display.**
Sans serif italic	**Command variable or numeric value that you supply, for example: SHOW *RAIDset-name* or** **set this_controller id=***(n,n,n,n,)*
italic	**Reference to other books or publications, for example: "See the *HSG80 Array Controller ACS V8.2 Release Notes* for details."**
. . .	**Indicates that a portion of an example or figure has been omitted.**
"this controller"	**The controller serving your current CLI session through a local or remote terminal.**
"other controller"	**The controller in a dual-redundant pair that's connected to the controller serving your current CLI session.**

Special Notices

This book doesn't contain detailed descriptions of standard safety procedures. However, it does contain warnings for procedures that could cause personal injury and cautions for procedures that could damage the controller or its related components. Look for these symbols when you're carrying out the procedures in this book:

WARNING: A warning indicates the presence of a hazard that can cause personal injury if you do not observe the precautions in the text.

CAUTION: A caution indicates the presence of a hazard that might damage hardware, corrupt software, or cause a loss of data.

IMPORTANT: An *important* note is a type of note that provides information essential to the completion of a task. Users can disregard information in a note and still complete a task, but they should not disregard an important note.

NOTE: A note provides additional information that's related to the completion of an instruction or procedure.

Required Tools

You will need the following tools to service the controller, cache module, external cache battery (ECB), the Power Verification and Addressing (PVA) module, the Gigabit Link Module (GLM), and the I/O module:

- A flathead screwdriver for loosening and tightening the I/O module retaining screws.
- A small phillips screwdriver for loosening and tightening the GLM access door screws.
- An antistatic wrist strap.
- An antistatic mat on which to place modules during servicing.
- A Storage Building Block (SBB) Extractor for removing StorageWorks building blocks. This tool is not required, but it will enable you to perform more efficiently.

Related Publications

The following table lists some of the documents that are related to the use of the controller, cache module, and external cache battery.

Document Title	Part Number
Fibre Channel Storage Switch Service Guide	AA-RHBZA-TE / 135268-001
Fibre Channel Storage Switch User's Guide	AA-RHBYA-TE / 135267-001
Fibre Channel Switch Quick Setup Guide	AA-RHC0A-TE / 135269-001
Compaq StorageWorks Data Replication Manager HSG80 ACS Version 8.4P Operations Guide	EK-HSG84-DT / 128519-001
Fibre Channel Arbitrated Loop Hub (DS-DHGGA-CA) User's Guide	EK-DHGGA-UG
KGPSA PCI-to-Fibre Channel Host Adapter	EK–KGPSA–UG
HSG80 Illustrated Parts Map	EK-HSG80-MP / 355217-001
Compaq StorageWorks Ultra SCSI RAID Enclosure (BA370-Series) User's Guide	EK–BA370–UG / 387403-001
The RAIDBOOK—A Source for RAID Technology	RAID Advisory Board
Compaq StorageWorks HSG80 Array Controller ACS Version 8.3 Configuration and CLI Reference Guide	EK-HSG80-RG / 387402-001
Compaq StorageWorks HSG80 Array Controller ACS Version 8.4 Configuration and CLI Reference Guide	EK-HSG84-RG / 118619-001
Command Console Version 2.1 (HSG80) User's Guide	AA–RFA2C-TE / 387405-003
Compaq StorageWorks RA8000/ESA12000 Storage Subsystem User's Guide	EK-SMCPR-UG / 387404-001

Document Title	Part Number
Compaq StorageWorks RA8000/ESA12000 HSG80 V8.x	
Installation Reference Manual	
for OpenVMS	**AA-RH4BA-TE / 387401-001**
for UNIXware	**AA-RFK8A-TE / 387397-001**
for DIGITAL UNIX	**AA-RFAUA-TE / 387389-001**
for Novell NetWare	**AA-RFB9A-TE / 387376-001**
for Silicon Graphix IRIX	**AA-RFBKA-TE / 387399-001**
for Windows NT Server - Intel	**AA-RFA9B-TE / 387387-002**
for SUN Solaris	**AA-RFBQC-TE / 387384-003**
for Windows NT Server - Alpha	**AA-RFB4A-TE / 387378-001**
for HP UNIX	**AA-RFBEC-TE / 387374-003**
Compaq StorageWorks RA8000/ESA12000 HSG80 V8.x	
Quick Setup Guide	
for OpenVMS	**AA-RH49A-TE / 387400-001**
for UNIXware	**AA-RFK6A-TE / 387396-001**
for DIGITAL UNIX	**AA-RFASA-TE / 387388-001**
for Novell NetWare	**AA-RFB7A-TE / 387375-001**
for Silicon Graphix IRIX	**AA-RFBHA-TE / 387398-001**
for Windows NT Server - Intel	**AA-RFA7B-TE / 387386-002**
for SUN Solaris	**AA-RFBNA-TE / 387385-001**
for Windows NT Server - Alpha	**AA-RFB2A-TE / 387377-001**
for HP UNIX	**AA-RFASA-TE / 387373-001**

Revision History

This is a new document.

Chapter 1

General Description

This chapter illustrates and describes in general terms your subsystem and its major components: the HSG80 array controller, its cache module, and its external cache battery. See Appendix A for a cross-reference of the Compaq spare part numbers to the DIGITAL spare part numbers. See the Fibre Channel Switch Documentation that came with the switch kit for specifics about how the switch operates. See the *KGPSA PCI-to-Fibre Channel Host Adapter User Guide* for information about the adapter that connects the subsystem to your host.

System Components Exploded View

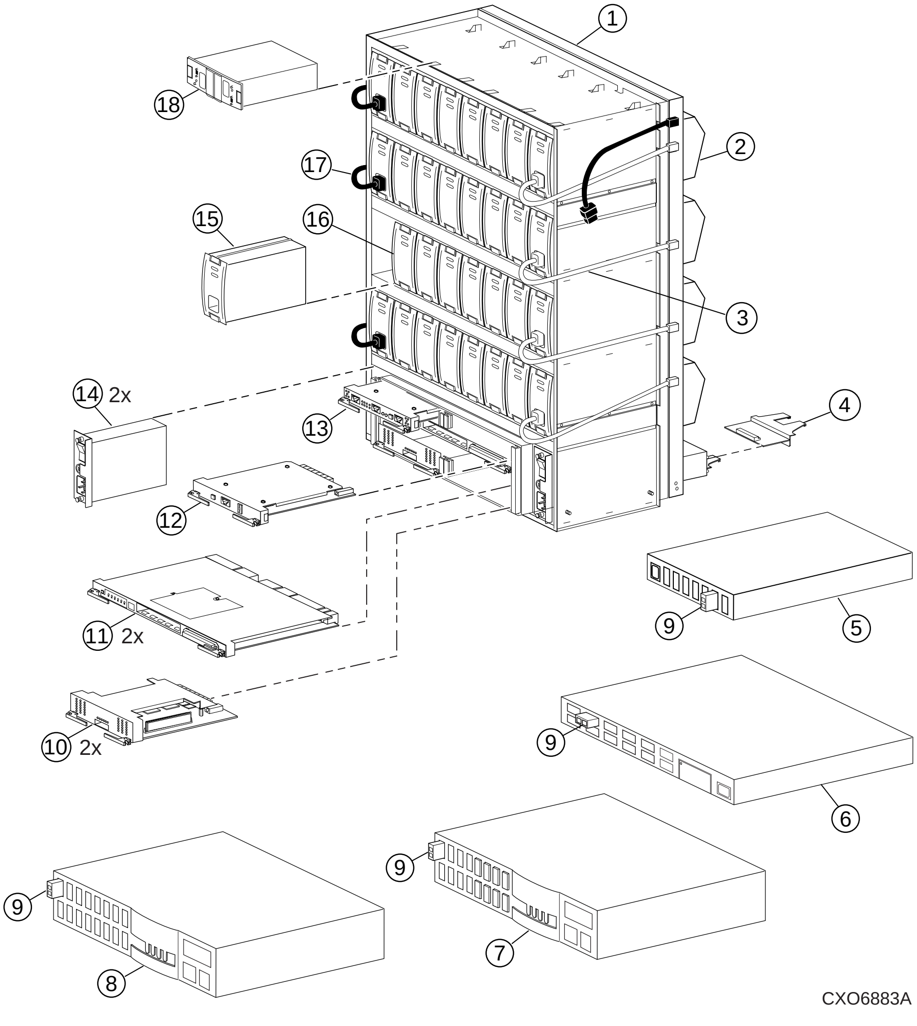
1
2
18
17
15
16
3
14 2x
4
13
12
9
5
11 2x
10 2x
9
6
9
9
7
8
CXO6883A

Figure 1–1. The HSG80 Subsystem

Table 1–1 The HSG80 Subsystem

Item	Description	Part Number
1	BA370 rack-mountable enclosure	401914-001
2	Cooling fan, blue	400293-001
	Cooling fan, gray	402602-001
3	Power cable kit, white	401916-001
4	I/O module, blue	400294-001
	I/O module, gray	401911-001
5	Fibre Channel hub, 7-port	234454-001
6	Fibre Channel hub, 12-port	340858-001
7	Fibre Channel switch, 8-port	127660-001
8	Fibre Channel switch, 16-port	127660-002
9	GBIC	234458-001
10	Cache module	400295-001
11	HSG80 controller	400285-001
12	PVA module	400299-001
13	EMU	400286-001
14	AC input module	400287-001
15	180-watt power supply	400288-001
16	Disk drive, 4 GB, 7200	402153-001
	Disk drive, 9 GB, 7200	400289-001
	Disk drive, 18 GB, 7200	400290-001
	Disk drive, 9 GB, 10K	402154-001
	Disk drive, 18 GB, 10K	402229-001
17	Power cable, black	401915-001
18	ECB, dual (shown)	400291-001
	ECB, single (not shown)	400292-001

HSG80 Array Controller

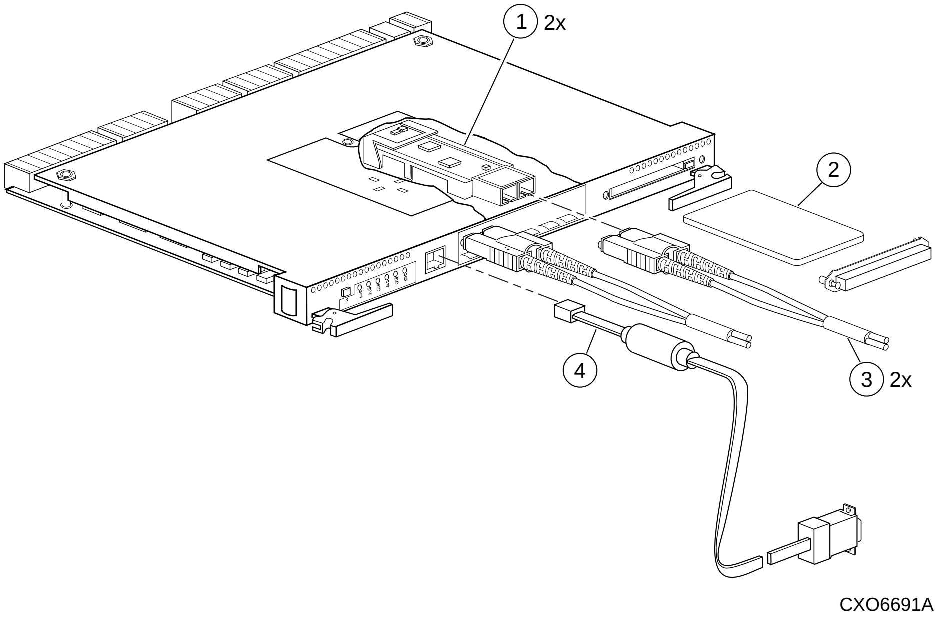
1 2x
2
3 2x
4
CXO6691A

Figure 1–2. HSG80 Array Controller–Fibre Channel Optical Cabling

Table 1–2 HSG80 Fibre Channel Array Controller

Item	Description	Part No.
1	Gigabit Link Module (GLM)	402603-001
2	Program card	402604-001
3	Fibre channel optical cable, 2 meter	242796-001
	Fibre channel optical cable, 5 meter	242796-002
	Fibre channel optical cable, 15 meter	242796-003
	Fibre channel optical cable, 30 meter	401937-001
	Fibre channel optical cable, 50 meter	401938-001
4	Maintenance port cable	402605-001

Cache Module

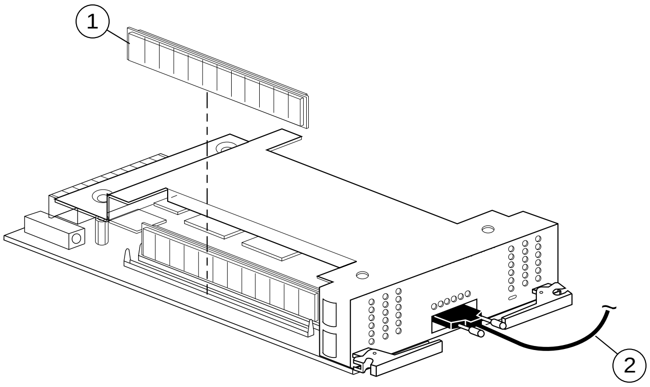

CXO6570A

Figure 1–3. Cache Module

Table 1–3 Cache Module

Item	Description	Part No.
1	DIMM, 32 MB	400296-001
	DIMM, 128 MB	400297-001
2	ECB Y cable for the BA370 Enclosure	400298-001
	ECB Y cable for the Data Center Cabinet	401913-001

Fibre Channel Switch

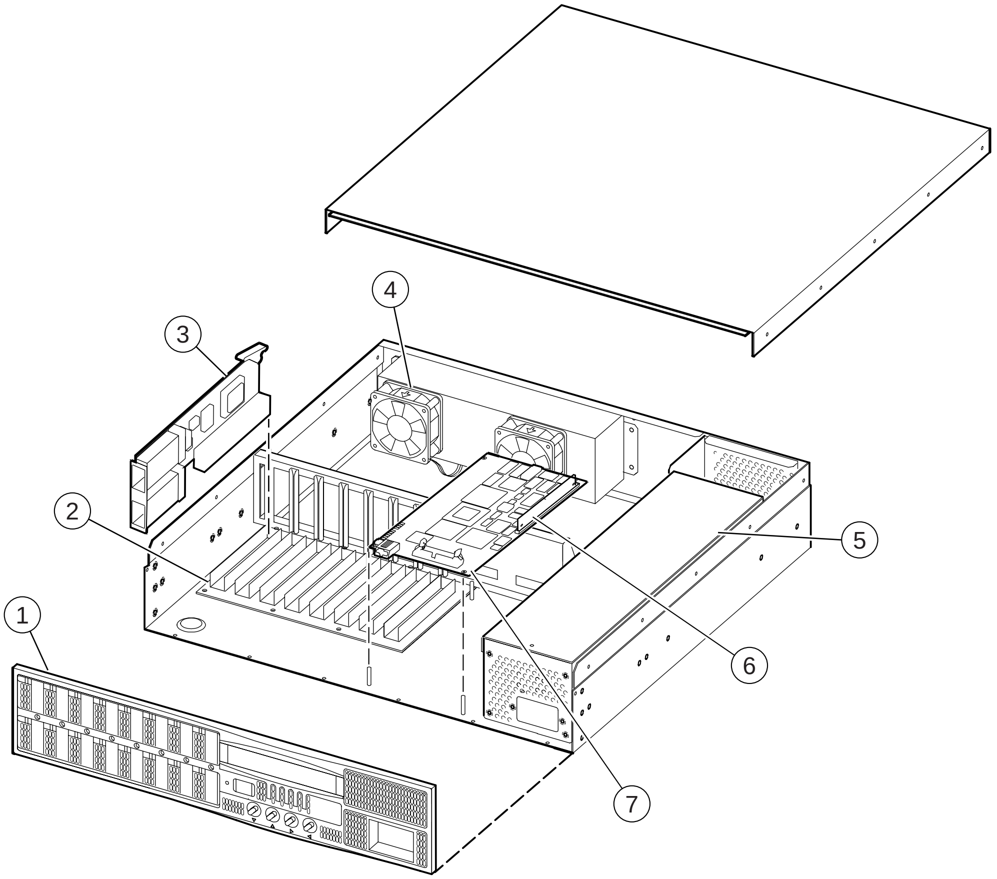

CXO6876A

Figure 1–4. Switch Components

Table 1–4 Fibre Channel Switch

Item	Description	Part No.
1	Front panel assembly	128328-001
2	Motherboard	401930-001
3	G-port interface card	401932-001
4	Fan assembly	401934-001
5	Power supply	401933-001
6	Memory module	128329-001
7	CPU card	401931-001

Environmental Monitoring Unit (EMU)

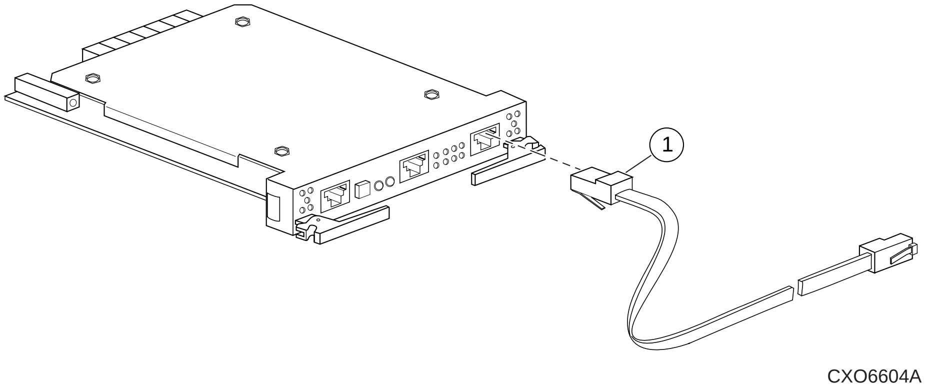

Figure 1–5 EMU

Table 1–5 EMU

Item	Description	Part No.
1	EMU communication cable, 4 meter	401949-001

Chapter 2
Replacement Procedures

This chapter describes the procedures for replacing the controller, cache module, external cache battery (ECB), gigabit link module (GLM), power verification and addressing (PVA) module, I/O module, environmental monitoring unit (EMU), DIMMs, fiber cable or switch, PCMCIA card, and a failed storageset member. Additionally, you will find procedures for shutting down and restarting the subsystem.

See the enclosure documentation for information about the power supplies, cooling fans, and cables.

Required Tools

You will need the following tools to service the controller, cache module, external cache battery (ECB), the Power Verification and Addressing (PVA) module, the Gigabit Link Module (GLM), and the I/O module:

- A flathead screwdriver for loosening and tightening the I/O module retaining screws.
- A small phillips screwdriver for loosening and tightening the GLM access door screws.
- A pair of needle-nose pliers to remove the switch cables from the controller.
- An antistatic wrist strap.
- An antistatic mat on which to place modules during servicing.
- A Storage Building Block (SBB) Extractor for removing StorageWorks building blocks. This tool is not required, but it will enable you to work more efficiently.

Electrostatic Discharge

Electrostatic discharge (ESD) is a common problem and may cause data loss, system down time, and other problems. The most common source of static electricity is the movement of people in contact with carpets and clothing. Low humidity also increases the amount of static electricity. You must discharge all static electricity prior to touching electronic equipment. Follow the precautions in Electrostatic Discharge Precautions given in the Preface whenever you are replacing any component.

Preparation Procedures

Establishing a Local Connection to the Controller

You can communicate with a controller locally or remotely. Use a local connection to configure the controller for the first time. Use a remote connection to your host system for all subsequent configuration tasks. See the *Quick Setup Guide* that came with your platform kit for details.

The maintenance port provides a convenient way to connect a PC or terminal to the controller so that you can troubleshoot and configure the controller. This port accepts a standard RS-232 jack from any EIA-423 compatible terminal or a PC with a terminal-emulation program. The maintenance port supports serial communications with default values of 9600 baud using 8 data bits, 1 stop bit, and no parity.

> **NOTE:** There are two maintenance port cables shown in Figure 2–1. One has a 9-pin connector molded onto its end for a PC connection. An optional cable is available for a terminal connection.

Follow these steps to establish a local connection for setting the controller's initial configuration:

1. Turn off the PC or terminal, and connect it to the controller, as shown in Figure 2–1.
    a. For a PC connection, plug one end of the maintenance port cable into the terminal; plug the other end into the controller's maintenance port.
    b. For a terminal connection, refer to Chapter 1 for cabling information.
2. Turn on the PC or terminal.
3. Configure the terminal emulation software for 9600 baud, 8 data bits, 1 stop bit, and no parity.

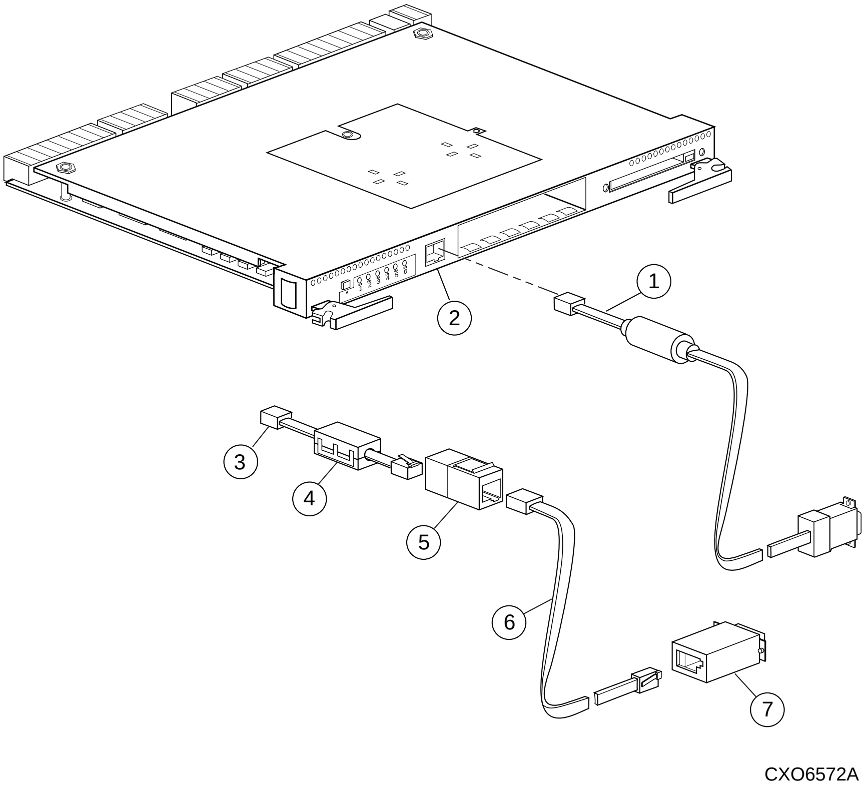
1
2
3
4
5
6
7
CXO6572A

Figure 2–1. PC/Terminal to Maintenance Port Connection

Table 2–1 Description of PC/Terminal to Maintenance Port Connection

Location	Description
①	**Maintenance port cable for a PC**
②	**Maintenance Port**
	Optional maintenance port cable for a terminal connection
③	**BC16E-xx cable assembly**
④	**Ferrite bead**
⑤	**RJ-11 adapter**
⑥	**RJ-11 extension cable**
⑦	**PC serial port adapter, 9 pin D-sub to 25 pin D-sub**

△ **CAUTION:** The cables connecting the controller and the PC (or terminal) may cause radio and television interference. Only connect a PC or terminal to the controller via the maintenance port when you need to communicate with the controller.

4. Press the Enter or Return key. The CLI prompt appears, indicating that you have established a local connection with the controller.
5. Optional: to increase the data transfer rate to 19200 baud:

   NOTE: If you are replacing a controller, do not increase the data transfer rate to 19200 baud. A new controller is set to 9600 baud (default).

   a. Set the controller to 19200 baud with one of the following commands:

   ```
   SET THIS_CONTROLLER TERMINAL SPEED=19200
   
   SET OTHER_CONTROLLER TERMINAL SPEED=19200
   ```

   b. Configure the PC or terminal for 19200 baud.

When you are entering CLI commands in a dual-redundant controller configuration, remember that the controller to which you’re connected is “this controller” and the remaining controller is the “other controller.”

Fibre Channel Optical Cable Cleaning Instructions

It is essential to clean the Fibre Channel optical cables when replacing the controller to ensure optimum performance and lifespan of the cable. You will need the polyester cloth from the cleaning kit that came with your cable. Figure 2–2 shows the ferrule on an optical cable.

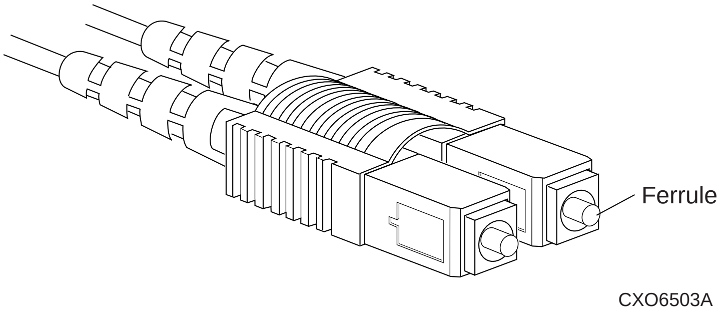

Figure 2–2. Ferrule on an Optical Cable

NOTE: When you use a cable for the first time, it is not necessary to follow this procedure.

1. Using the polyester cleaning cloth that came with the cable cleaning kit, cover your fingers, and squeeze one ferrule between two fingers.
2. Rotate the cloth around the ferrule one or two times.
3. When the first ferrule is clean, move your fingers to a different area of the cloth, and repeat steps 1 and 2 for the remaining ferrule.

CAUTION: It is only necessary to clean the Fibre Channel optical cable when replacing a controller. Overcleaning may cause damage to the ferrules.

Cleaning the GLM

When you replace the GLM, it is important to clean its receptacles to ensure optimum performance. Use the following steps to clean the GLM:

1. Obtain the polyester swab from the cleaning kit that came with your Fibre Channel optical cable.
2. Gently insert the lint-free polyester swab into the transmit-side of the optical GLM cavity (see Figure 2–3).

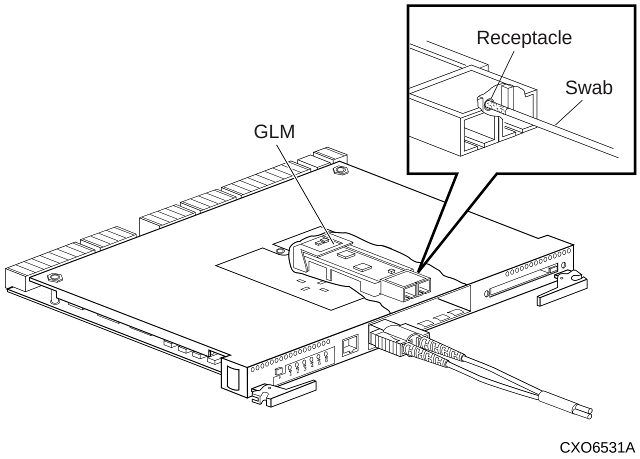

Figure 2–3. Cleaning Procedure for GLM

> **CAUTION:** Do not exert excessive force when the swab reaches its stopping point, and do not repeat this procedure frequently. Failure to comply with this caution may cause scratching on the GLM and ultimately damage the optic connection. Overcleaning may cause damage to the GLM.

3. Carefully dust out the cavity by rotating the swab tip back and forth one or two times.
4. Repeat steps 1 and 2 for the receiving side of the optical GLM cavity.

Shutting Down the Subsystem

Use the following steps to shut down a subsystem:

1. From a host console, stop all host activity and dismount the logical units in the subsystem.
2. Connect a PC or terminal to the maintenance port of one of the controllers in your subsystem.
3. Shut down the controllers. In single controller configurations, you only need to shut down “this controller.” In dual-redundant controller configurations, shut down the “other controller” first, then shut down “this controller” with the following commands:

   ```
   SHUTDOWN OTHER_CONTROLLER
   SHUTDOWN THIS_CONTROLLER
   ```

   When the controllers shut down, their reset buttons and their first three LEDs are lit continuously. This may take several minutes, depending on the amount of data that needs to be flushed from the cache modules.
4. Turn off the power to the subsystem.

△ **CAUTION:** If you are shutting down the controller for longer than one day, perform the steps in the next section, “Disabling and Enabling the External Cache Batteries,” to prevent the write-back cache batteries from discharging.

Disabling and Enabling the External Cache Batteries

Use the following steps to disable the External Cache Batteries (ECBs):

NOTE: The ECB SBB may contain one or two batteries, depending on the configuration.

1. Press the battery-disable switch located on each battery within the ECB SBB. The switch is the small button labeled SHUT OFF next to the status LED (see Figure 2–4). Hold each switch in for approximately five seconds. The ECB's status LED will flash once and then shut off. Make sure you perform this procedure on both ECB 1 and ECB 2, if appropriate.
2. The batteries are no longer powering the cache module.

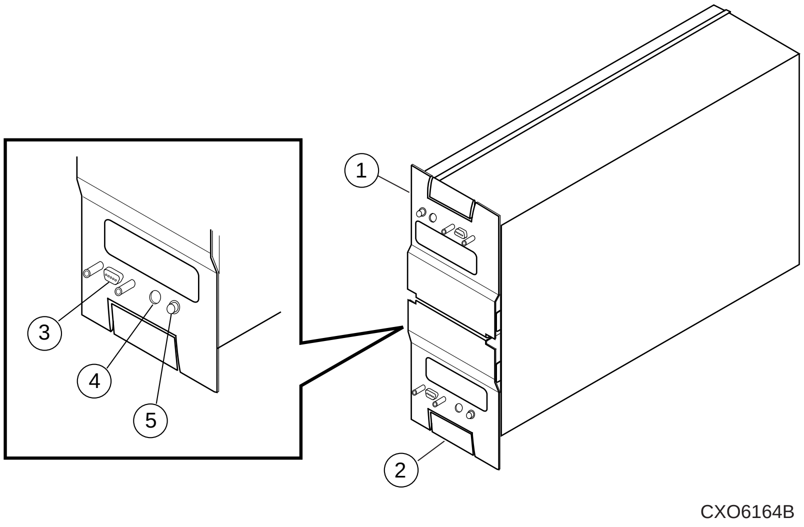

Figure 2–4. ECB SBB Battery Disable Switch Location

Table 2–2 Description of ECB SBB Battery Disable Switch

Location	Description
①	**External Cache Battery 1**
②	**External Cache Battery 2**
③	**Power connector**
④	**Status LED**
⑤	**Battery disable switch**

NOTE: To return to normal operation, apply power to the storage subsystem. The cache battery will be enabled when the subsystem is powered on.

Restarting the Subsystem

Use the following steps to restart a subsystem:

1. Plug in the subsystem’s power cord, if it is not already plugged in.
2. Turn on the subsystem. The controllers automatically restart and the ECBs automatically re-enable themselves to provide backup power to the cache modules.

Replacing Modules in a Single-Controller Configuration

Follow the instructions in this section to replace modules in a single-controller configuration (see Figure 2–5). If you're replacing modules in a dual-redundant controller configuration, see "Replacing Modules in a Dual-Redundant Controller Configuration," page 2–19. To upgrade a single controller configuration to a dual redundant controller configuration, see Chapter 3, "Upgrading the Subsystem."

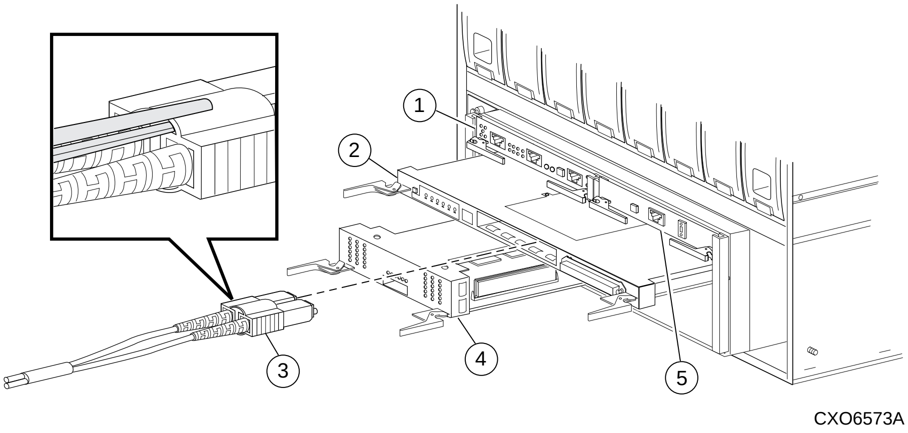

Figure 2–5. Single-Controller Configuration

Table 2–3 Description of Single-Controller Configuration

Location	Description
①	**EMU**
②	**Controller**
③	**Fibre channel optical cable**
④	**Cache Module**
⑤	**PVA Module**

The following sections cover procedures for replacing both the controller and cache module, replacing the controller, and replacing the cache module.

CAUTION: In a single-controller configuration, you must shut down the subsystem before removing or replacing any modules. If you remove the controller or any other module without first shutting down the subsystem, data loss may occur.

Replacing a Controller and Cache Module in a Single-Controller Configuration

If both the controller and cache module need to be replaced, follow the steps in “Replacing a Controller in a Single-Controller Configuration,” page 2–12, and the steps in “Replacing a Cache Module in a Single-Controller Configuration,” page 2–16.

Replacing a Controller in a Single-Controller Configuration

Use the following steps in “Removing the Controller in a Single-Controller Configuration” and “Installing the Controller in a Single-Controller Configuration” to replace the controller.

Removing the Controller in a Single-Controller Configuration

Use the following steps to remove the controller:

1. From the host console, dismount the logical units in the subsystem. If you are using a Windows NT platform, shut down the server.
2. If the controller is operating, connect a PC or terminal to the controller’s maintenance port.

   If the controller is not operating, go to step 5.

3. Run FMU to obtain the last failure codes, if desired.

   NOTE: If you initialized a container with the SAVE_ CONFIGURATION switch, you can save this controller's current device configuration using the CONFIGURATION SAVE command. If CONFIGURATION SAVE is not used, you will have to manually configure the new controller as described in *HSG80 ACS Version 8.x Configuration and CLI Reference Guide*.

4. Shut down the controller with the following command:

   ```
   SHUTDOWN THIS_CONTROLLER
   ```

   When the controller shuts down, its reset button and the first three LEDs are lit continuously.

CAUTION: ESD can easily damage a controller. Wear a snug-fitting, grounded ESD wrist strap.

The cache module may contain unwritten data if the controller crashed and you weren't able to shut it down with the SHUTDOWN THIS_CONTROLLER command.

---

5. Remove the program card's ESD cover and program card. Save them for the replacement controller.
6. Disconnect the host bus cables from the controller using needle nose pliers (see inset on Figure 2–5).

   NOTE: One or two host bus cables may be attached, depending on the configuration.

7. If connected, disconnect the PC or terminal from the controller's maintenance port.
8. Disengage both retaining levers and remove the controller, then place the controller into an antistatic bag or onto a grounded antistatic mat.

Installing the Controller in a Single-Controller Configuration

Use the following steps to install the controller:

CAUTION: ESD can easily damage a controller. Wear a snug-fitting, grounded ESD wrist strap.

Make sure you align the controller in the appropriate guide rails. If you do not align the module correctly, damage to the backplane can occur.

---

1. Insert the new controller into its slot, and engage its retaining levers.
2. Connect the host bus cables to the new controller.

   NOTE: One or two host bus cables may be attached, depending on the configuration.
3. Connect a PC or terminal to the controller's maintenance port.
4. Hold the reset button while inserting the program card into the new controller. Release the reset button and replace the ESD cover.
5. When the CLI prompt reappears, display details about the controller you configured. Use the following command:

   ```
   SHOW THIS_CONTROLLER FULL
   ```

   See the SHOW THIS_CONTROLLER FULL in the *HSG80 ACS Version 8.x Configuration and CLI Reference Guide* for more information about using this command.
6. See the *HSG80 ACS Version 8.x Configuration and CLI Reference Guide* to configure the controller.

   NOTE: If the controller you're installing was previously used in another subsystem, it will need to be purged of the controller's old configuration (see the *HSG80 ACS Version 8.x Configuration and CLI Reference Guide*).
7. To restore a configuration saved with the SAVE_CONFIGURATION switch, hold button 6 while pressing and releasing the reset button.

8. Using CLCP, install any patches that you had installed on the previous controller (see Chapter 3, “Upgrading the Subsystem.”)
9. Mount the logical units on the host. If you are using a Windows NT platform, restart the server.
10. Set the subsystem date and time with the following command:

    ```
    SET THIS_CONTROLLER TIME=dd-mmm-yyyy:hh:mm:ss
    ```

11. Disconnect the PC or terminal from the controller’s maintenance port.

Replacing a Cache Module in a Single-Controller Configuration

Use the following steps in “Removing the Cache Module in a Single-Controller Configuration” and “Installing the Cache Module in a Single-Controller Configuration” to replace the cache module.

Removing the Cache Module in a Single-Controller Configuration

Use the following steps to remove the cache module:

1. From the host console, dismount the logical units in the subsystem. If you are using a Windows NT platform, shut down the server.
2. If the controller is operating, connect a PC or terminal to the controller’s maintenance port.

   If the controller is not operating, go to step 5.
3. Run FMU to obtain the last failure codes, if desired.
4. Shut down the controller with the following command:

   ```
   SHUTDOWN THIS_CONTROLLER
   ```

   When the controller shuts down, its reset button and the first three LEDs are lit continuously.

   △ **CAUTION:** ESD can easily damage a cache module or a DIMM. Wear a snug-fitting, grounded ESD wrist strap.

   ---
5. Disable the ECB by pressing the battery disable switch until the status light stops blinking—about five seconds.

   △ **CAUTION:** The ECB must be disabled—the status light is not lit and is not blinking—before disconnecting the ECB cable from the cache module. Failure to disable the ECB could damage the cache module.

   ---
6. Disconnect the ECB cable from the cache module.

7. Disengage both retaining levers, remove the cache module, and place the cache module into an antistatic bag or onto a grounded antistatic mat.

   NOTE: Remove the DIMMs from the cache module. They will be installed in the replacement cache module.

8. Press down on the DIMM retaining levers at either end of the DIMM you want to remove.
9. Grasp the DIMM and gently remove it from the DIMM slot. Repeat for all DIMMs.

Installing the Cache Module in a Single-Controller Configuration

Use the following steps to install the cache module:

CAUTION: ESD can easily damage a cache module or a DIMM. Wear a snug-fitting, grounded ESD wrist strap.

Make sure you align the cache module in the appropriate guide rails. If you do not align the cache module correctly, damage to the backplane can occur.

1. Insert the DIMM straight into the socket of the cache module and ensure that the notches in the DIMM align with the tabs in the socket (see Figure 2–12).
2. Press the DIMM gently until it’s seated in the socket.
3. Double-check to ensure both ends of the DIMM are firmly seated in the slot and both retaining clips engage the DIMM.
4. Insert the new cache module into its slot and engage its retaining levers.

CAUTION: The ECB must be disabled—the status light is not lit and is not blinking—before connecting the ECB cable to the cache module. Failure to disable the ECB could result in ECB damage.

5. Connect the ECB cable to the new cache module.

6. If not already connected, connect a PC or terminal to the controller’s maintenance port.
7. Restart the controller by pressing its reset button.
8. When the CLI prompt reappears, display details about the controller you configured. Use the following command:

   ```
   SHOW THIS_CONTROLLER FULL
   ```

9. Mount the logical units on the host. If you are using a Windows NT platform, restart the server.
10. Set the subsystem date and time with the following command:

    ```
    SET THIS_CONTROLLER TIME=dd-mmm-yyyy:hh:mm:ss
    ```

11. Disconnect the PC or terminal from the controller’s maintenance port.

Replacing Modules in a Dual-Redundant Controller Configuration

Follow the instructions in this section to replace modules in a dual-redundant controller configuration (see Figure 2–6). If you're replacing modules in a single controller configuration, see "Replacing Modules in a Single-Controller Configuration," page 2–11.

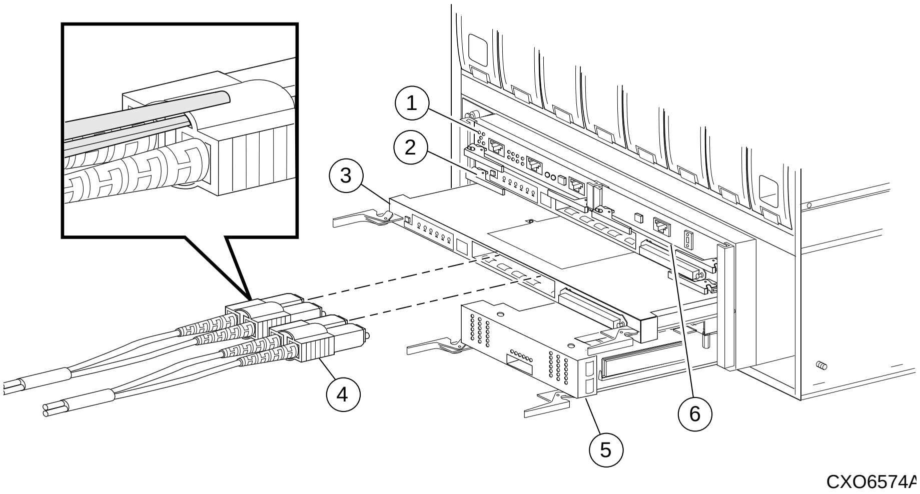

Figure 2–6. Dual-Redundant Controller Configuration

Table 2–4 Description of Dual-Redundant-Controller Configuration

Location	Description
①	**EMU**
②	**Controller A**
③	**Controller B**
④	**Fibre channel optical cables**
⑤	**Cache Module B**
⑥	**PVA Module**

The following sections cover procedures for replacing both the controller and cache module, replacing the controller, and replacing the cache module.

Note the following before starting the replacement procedures:

- The new controller’s hardware must be compatible with the functioning controller’s hardware. See the product-specific release notes that accompanied the software release for information regarding hardware compatibility.
- The software versions and patch levels must be the same on both controllers.
- The new cache module must contain the same memory configuration as the module it’s replacing.

Replacing a Controller and Cache Module in a Dual-Redundant Controller Configuration

Use the following steps in “Removing a Controller and Cache Module in a Dual-Redundant Controller Configuration” and “Installing a Controller and its Cache Module in a Dual-Redundant Controller Configuration” to replace a controller and its cache module.

Removing a Controller and Cache Module in a Dual-Redundant Controller Configuration

Use the following steps to remove a controller and its cache module.

1. Connect a PC or terminal to the operational controller’s maintenance port. The controller to which you’re connected is “this controller”; the controller that you’re removing is the “other controller.”
2. Disable failover with the following command:

   ```
   SET NOFAILOVER
   ```

3. Remove the ESD cover and program card from the “other controller.” Save them for the replacement controller.

4. Start FRUTIL with the following command:

   ```
   RUN FRUTIL
   ```

   FRUTIL displays the following:

   ```
   Do you intend to replace this controller’s cache battery? Y/N
   ```

5. Enter N(o). FRUTIL displays the FRUTIL Main menu:

   ```
   FRUTIL Main Menu:
    1. Replace or remove a controller or cache module
    2. Install a controller or cache module
    3. Replace a PVA module
    4. Replace an I/O module
    5. Exit
   Enter choice: 1, 2, 3, 4, or 5 ->
   ```

6. Enter option 1, *Replace or remove a controller or cache module*, from the FRUTIL Main menu. FRUTIL displays the Replace or Remove Options menu:

   ```
   Replace or remove Options:
    1. Other controller and cache module
    2. Other controller module
    3. Other cache module
    4. Exit
   Enter choice: 1, 2, 3, or 4 ->
   ```

7. Enter option 1, *Other controller and cache module*, from the Replace or Remove Options menu. FRUTIL displays the following:

   ```
                        Slot Designations
                           (front view)

            [  ---   EMU  ---  ][  ---   PVA  ---  ]
            [  --------   Controller A  -------    ]
            [  --------   Controller B  -------    ]
            [  Cache Module A  ][  Cache Module B  ]

   Remove both the slot A [or B] controller and cache module? Y/N
   ```

8. Enter Y(es) and press return. FRUTIL displays the following:

```
Quiescing all device ports.  Please wait...
  Device Port 1 quiesced.
  Device Port 2 quiesced.
  Device Port 3 quiesced.
  Device Port 4 quiesced.
  Device Port 5 quiesced.
  Device Port 6 quiesced.
 All device ports quiesced.
Remove the slot A [or B] controller (the one without a blinking green
LED) within 4 minutes.
```

CAUTION: The device ports must quiesce before removing the controller. Failure to allow the ports to quiesce may result in data loss. Quiescing may take several minutes.

ESD can easily damage a controller, cache module, or DIMM. Wear a snug-fitting, grounded ESD wrist strap.

NOTE: A countdown timer allows a total of four minutes to remove both the controller and cache module. If you exceed four minutes, “this controller” will exit FRUTIL and resume operations. If this happens, return to step 4.

9. Remove the host bus cables from the “other controller” using needle nose pliers (see inset on Figure 2–6).

   NOTE: One or two host bus cables may be attached, depending on the configuration.

10. Disengage both retaining levers and remove the “other controller,” then place the controller into an antistatic bag or onto a grounded antistatic mat.

    Once the controller is removed, FRUTIL displays the following:

```
Remove the slot A [or B] cache module within x minutes, xx seconds.
```

11. Disengage both retaining levers and partially remove the “other controller’s” cache module—about half way.

12. Disable the ECB by pressing the battery disable switch until the status light stops blinking—about five seconds.

△ **CAUTION:** The ECB must be disabled—the status light is not lit and is not blinking—before disconnecting the ECB cable from the cache module. Failure to disable the ECB could result in cache module damage.

---

13. Disconnect the ECB cable from the “other controller’s” cache module, remove the cache module, and place it onto a grounded antistatic mat or into an antistatic bag.

    Once the cache module is removed, FRUTIL displays the following:

```
Restarting all device ports. Please wait...
  Device Port 1 restarted.
  Device Port 2 restarted.
  Device Port 3 restarted.
  Device Port 4 restarted.
  Device Port 5 restarted.
  Device Port 6 restarted.
Do you have a replacement controller and cache module? Y/N
```

14. Enter N(o) if you don’t have a replacement controller and cache module; FRUTIL will exit. Disconnect the PC or terminal from the controller’s maintenance port.

    Enter Y(es) if you have a replacement controller and cache module and want to install it now. FRUTIL displays the following:

```
Insert both the slot A [or B] controller and cache module? Y/N
```

NOTE: If you entered Y(es) go to step 9 on page 2–25.

Remove the DIMMs from the cache module. They will be installed in the replacement cache module.

15. Press down on the DIMM retaining levers at either end of the DIMM you want to remove.

16. Grasp the DIMM and gently remove it from the DIMM slot. Repeat for all DIMMs.

Installing a Controller and its Cache Module in a Dual-Redundant Controller Configuration

Use the following steps to install a controller and its cache module.

△ **CAUTION:** ESD can easily damage a controller, cache module, or DIMM. Wear a snug-fitting, grounded ESD wrist strap.

---

1. Insert the DIMM straight into the socket in the replacement cache module and ensure that the notches in the DIMM align with the tabs in the socket (see Figure 2–12).
2. Press the DIMM gently until it's seated in the socket.
3. Double-check to ensure both ends of the DIMM are firmly seated in the slot and both retaining clips engage the DIMM. Repeat for all DIMMs.
4. Connect a PC or terminal to the operational controller. The controller to which you're connected is "this controller"; the controller whose cache module you're installing is the "other controller."
5. Start FRUTIL with the following command:

```
RUN FRUTIL
```

FRUTIL displays the following:

```
Do you intend to replace this controller’s cache battery? Y/N
```

6. Enter N(o). FRUTIL displays the FRUTIL Main menu:

```
FRUTIL Main Menu:
 1. Replace or remove a controller or cache module
 2. Install a controller or cache module
 3. Replace a PVA module
 4. Replace an I/O module
 5. Exit
Enter choice: 1, 2, 3, 4, or 5 ->
```

7. Enter option 2, *Install a controller or cache module*, from the FRUTIL Main menu. FRUTIL displays the Install Options menu:

```
Install Options:
 1. Other controller and cache module
 2. Other controller module
 3. Other cache module
 4. Exit
Enter choice: 1, 2, 3, or 4 ->
```

8. Enter option 1, *Other controller and cache module*, from the Install Options menu. FRUTIL display the following:

```
Insert both the slot A [or B] controller and cache module? Y/N
```

9. Enter Y(es) and press return. FRUTIL displays the following:

```
Quiescing all device ports.  Please wait...
  Device Port 1 quiesced.
  Device Port 2 quiesced.
  Device Port 3 quiesced.
  Device Port 4 quiesced.
  Device Port 5 quiesced.
  Device Port 6 quiesced.
 All device ports quiesced.
.
.
.
Perform the following steps:
 1. Turn off the battery for the new cache module by pressing
    the battery’s shut off button for five seconds
 2. Connect the battery to the new cache module.
 3. Insert the new cache module in slot A [or B] within 4
    minutes.
```

NOTE: A countdown timer allows a total of four minutes to install both the cache module and controller. If you exceed four minutes, “this controller” will exit FRUTIL and resume operations. If this happens, return to step 5.

CAUTION: ESD can easily damage a controller or a cache module. Wear a snug-fitting, grounded ESD wrist strap.

10. Disable the ECB to which you're connecting the new cache module by pressing the battery disable switch until the status light stops blinking—about five seconds.

CAUTION: The ECB must be disabled—the status light is not lit and is not blinking—before connecting the ECB cable to the cache module. Failure to disable the ECB could result in ECB damage.

Make sure you align the cache module and controller in the appropriate guide rails. If you do not align the modules correctly, damage to the backplane can occur.

11. Connect the ECB cable to the new cache module.
12. Insert the new cache module into its slot and engage its retaining levers. FRUTIL displays the following:

```
Insert the controller module, WITH its program card, in slot A [or B]
within x minutes, xx seconds.
```

13. Ensure that the program card is in the replacement controller and insert the new controller into its slot. Engage its retaining levers. When fully seated, the newly installed controller will boot.

FRUTIL displays the following:

```
If the other controller did not restart, follow these steps:
  1. Press and hold the other controller's reset button.
  2. Insert the other controller's program card.
  3. Release the reset button.
Press return to continue.
```

NOTE: In mirrored mode, FRUTIL will initialize the mirrored portion of the new cache module, check for old data on the cache module, and then restart all device ports. After the device ports have been restarted, FRUTIL will test the cache module and the ECB. After the test completes, the device ports will quiesce and a mirror copy of the cache module data will be created on the newly installed cache module.

14. Connect the host bus cables to the new controller.

    NOTE: One or two host bus cables may be attached, depending on the configuration.

15. Press return to continue. FRUTIL will exit. If the other controller did not restart, follow these steps:
    a. Press and hold the other controller's reset button.
    b. Insert the other controller's program card.
    c. Release the reset button.
16. See the *HSG80 ACS Version 8.x Configuration and CLI Reference Guide* to configure the controller.

    NOTE: If the controller you've installed was previously used in another subsystem, it will need to be purged of the controller's old configuration (see the *HSG80 ACS Version 8.x Configuration and CLI Reference Guide*).

17. Enable failover, and re-establish the dual-redundant controller configuration with the following command:

    ```
    SET FAILOVER COPY=THIS_CONTROLLER
    ```

    This command copies the subsystem's configuration from "this controller" to the new controller.

18. Disconnect the PC or terminal from the controller's maintenance port.

Replacing a Controller in a Dual-Redundant Controller Configuration

Use the following steps in “Removing a Controller in a Dual-Redundant Controller Configuration” and “Installing a Controller in a Dual-Redundant Controller Configuration” to replace a controller.

Removing a Controller in a Dual-Redundant Controller Configuration

Use the following steps to remove a controller:

1. Connect a PC or terminal to the operational controller’s maintenance port. The controller to which you’re connected is “this controller”; the controller that you’re removing is the “other controller.”
2. Disable failover and take the controllers out of their dual-redundant configuration with the following command:

   ```
   SET NOFAILOVER
   ```
3. Remove the program card’s ESD cover and program card. Save them for the replacement controller.
4. Start FRUTIL with the following command:

   ```
   RUN FRUTIL
   ```

   FRUTIL displays the following:

   ```
   Do you intend to replace this controller’s cache battery? Y/N
   ```
5. Enter N(o). FRUTIL displays the FRUTIL Main menu:

   ```
   FRUTIL Main Menu:
    1. Replace or remove a controller or cache module
    2. Install a controller or cache module
    3. Replace a PVA module
    4. Replace an I/O module
    5. Exit
   Enter choice: 1, 2, 3, 4, or 5 ->
   ```

6. Enter option 1, *Replace or remove a controller or cache module*, from the FRUTIL Main menu. FRUTIL displays the Replace or Remove Options menu:

   ```
   Replace or remove Options:
    1. Other controller and cache module
    2. Other controller module
    3. Other cache module
    4. Exit
   Enter choice: 1, 2, 3, or 4 ->
   ```

7. Enter option 2, *Other controller module*, from the Replace or Remove Options menu. FRUTIL displays the following:

   ```
                        Slot Designations
                           (front view)

            [  ---   EMU  ---  ][  ---   PVA  ---  ]
            [  --------   Controller A  -------    ]
            [  --------   Controller B  -------    ]
            [  Cache Module A  ][  Cache Module B  ]

   Remove the slot A [or B] controller? Y/N
   ```

8. Type Y(es) and press return. FRUTIL displays the following:

   ```
   Quiescing all device ports.  Please wait...
     Device Port 1 quiesced.
     Device Port 2 quiesced.
     Device Port 3 quiesced.
     Device Port 4 quiesced.
     Device Port 5 quiesced.
     Device Port 6 quiesced.
    All device ports quiesced.
   Remove the slot A [or B] controller (the one without a blinking green
   LED) within 2 minutes.
   ```

⚠ **CAUTION:** The device ports must quiesce before removing the controller. Failure to allow the ports to quiesce may result in data loss. Quiescing may take several minutes.

ESD can easily damage a controller. Wear a snug-fitting, grounded ESD wrist strap.

NOTE: A countdown timer allows a total of two minutes to remove the controller. If you exceed two minutes, “this controller” will exit FRUTIL and resume operations. If this happens, return to step 4.

9. Remove the host bus cables from the “other controller” using needle nose pliers (see inset on Figure 2–6).

   NOTE: One or two host bus cables may be attached, depending on the configuration.

10. Disengage both retaining levers, remove the “other controller,” and place this controller into an antistatic bag or onto a grounded antistatic mat.

    Once the controller is removed, FRUTIL displays the following:

```
Restarting all device ports. Please wait...
  Device Port 1 restarted.
  Device Port 2 restarted.
  Device Port 3 restarted.
  Device Port 4 restarted.
  Device Port 5 restarted.
  Device Port 6 restarted.
Do you have a replacement controller? Y/N
```

11. Enter N(o) if you don’t have a replacement controller; FRUTIL will exit. Disconnect the PC or terminal from the controller’s maintenance port.

    Enter Y(es) if you have a replacement controller and want to install it now. FRUTIL displays the following:

```
Insert the slot A [or B] controller? Y/N
```

NOTE: If you entered Y(es) go to step 6 on page 2–32.

Installing a Controller in a Dual-Redundant Controller Configuration

Use the following steps to install a controller:

1. Connect a PC or terminal to the operational controller’s maintenance port. The controller to which you’re connected is “this controller”; the controller that you’re installing is the “other controller.”
2. Start FRUTIL with the following command:

   ```
   RUN FRUTIL
   ```

   FRUTIL displays the following:

   ```
   Do you intend to replace this controller’s cache battery? Y/N
   ```

3. Enter N(o). FRUTIL displays the FRUTIL Main menu:

   ```
   FRUTIL Main Menu:
    1. Replace or remove a controller or cache module
    2. Install a controller or cache module
    3. Replace a PVA module
    4. Replace an I/O module
    5. Exit
   Enter choice: 1, 2, 3, 4, or 5 ->
   ```

4. Enter option 2, *Install a controller or cache module*, from the FRUTIL Main menu. FRUTIL displays the Install Options menu:

   ```
   Install Options:
    1. Other controller and cache module
    2. Other controller module
    3. Other cache module
    4. Exit
   Enter choice: 1, 2, 3, or 4 ->
   ```

5. Enter option 2, *Other controller module*, from the Install Options menu. FRUTIL display the following:

   ```
   Insert the slot A [or B] controller? Y/N
   ```

6. Enter Y(es) and press return. FRUTIL displays the following:

```
Quiescing all device ports.  Please wait...
  Device Port 1 quiesced.
  Device Port 2 quiesced.
  Device Port 3 quiesced.
  Device Port 4 quiesced.
  Device Port 5 quiesced.
  Device Port 6 quiesced.
 All device ports quiesced.
.
.
.
Insert the controller module, WITH its program card, in slot A [or B]
within x minutes, xx seconds.
```

NOTE: A countdown timer allows a total of two minutes to install the controller. If you exceed two minutes, "this controller" will exit FRUTIL and resume operations. If this happens, return to step 2.

CAUTION: ESD can easily damage a controller. Wear a snug-fitting, grounded ESD wrist strap.

Make sure you align the controller in the appropriate guide rails. If you do not align the controller correctly, damage to the backplane can occur.

7. Ensure that the program card is in the replacement controller and insert the new controller into its slot. Engage its retaining levers. When fully seated, the newly installed controller will boot.

   FRUTIL displays the following:

```
If the other controller did not restart, follow these steps:
  1. Press and hold the other controller's reset button.
  2. Insert the other controller's program card.
  3. Release the reset button.
Press return to continue.
```

8. Connect the host bus cables to the new controller.

NOTE: One or two host bus cables may be attached, depending on the configuration.

9. Press return to continue. FRUTIL will exit. If the other controller did not restart, follow these steps:
    a. Press and hold the other controller's reset button.
    b. Insert the other controller's program card.
    c. Release the reset button.
10. See the *HSG80 ACS Version 8.x Configuration and CLI Reference Guide* to configure the controller.

NOTE: If the controller you've installed was previously used in another subsystem, it will need to be purged of the controller's old configuration (see the *HSG80 ACS Version 8.x Configuration and CLI Reference Guide*).

11. Enable failover, and re-establish the dual-redundant controller configuration with the following command:

```
SET FAILOVER COPY=THIS_CONTROLLER
```

This command copies the subsystem's configuration from "this controller" to the new controller.

12. Disconnect the PC or terminal from the controller's maintenance port.

Replacing a Cache Module in a Dual-Redundant Controller Configuration

Use the following steps in “Removing a Cache Module in a Dual-Redundant Controller Configuration” and “Installing a Cache Module in a Dual-Redundant Controller Configuration” to replace a cache module.

NOTE: The new cache module must contain the same memory configuration as the cache module it’s replacing.

Removing a Cache Module in a Dual-Redundant Controller Configuration

Use the following steps to remove a cache module:

1. Connect a PC or terminal to the operational controller’s maintenance port. The controller to which you’re connected is “this controller”; the controller that you’re removing is the “other controller.”
2. Disable failover and take the controllers out of their dual-redundant configuration with the following command:

   ```
   SET NOFAILOVER
   ```

3. Start FRUTIL with the following command:

   ```
   RUN FRUTIL
   ```

   FRUTIL displays the following:

   ```
   Do you intend to replace this controller’s cache battery? Y/N
   ```

4. Enter N(o). FRUTIL displays the FRUTIL Main menu:

   ```
   FRUTIL Main Menu:
    1. Replace or remove a controller or cache module
    2. Install a controller or cache module
    3. Replace a PVA module
    4. Replace an I/O module
    5. Exit
   Enter choice: 1, 2, 3, 4, or 5 ->
   ```

5. Enter option 1, *Replace or remove a controller or cache module*, from the FRUTIL Main menu. FRUTIL displays the Replace or Remove Options menu:

```
Replace or remove Options:
 1. Other controller and cache module
 2. Other controller module
 3. Other cache module
 4. Exit
Enter choice: 1, 2, 3, or 4 ->
```

6. Enter option 3, *Other cache module*, from the Replace or Remove Options menu. FRUTIL displays the following:

```
                     Slot Designations
                        (front view)
         [  ---   EMU  ---  ][  ---   PVA  ---  ]
         [  --------   Controller A  -------    ]
         [  --------   Controller B  -------    ]
         [  Cache Module A  ][  Cache Module B  ]

Remove the slot A [or B] cache module? Y/N
```

7. Enter Y(es) and press return. FRUTIL displays the following:

```
Quiescing all device ports.  Please wait...
  Device Port 1 quiesced.
  Device Port 2 quiesced.
  Device Port 3 quiesced.
  Device Port 4 quiesced.
  Device Port 5 quiesced.
  Device Port 6 quiesced.
 All device ports quiesced.
Remove the slot A [or B] cache module within 2 minutes. Then
disconnect the external battery from the cache module.
```

CAUTION: The device ports must quiesce before removing the cache module. Failure to allow the ports to quiesce may result in data loss. Quiescing may take several minutes.

ESD can easily damage the cache module or a DIMM. Wear a snug-fitting, grounded ESD wrist strap.

NOTE: A countdown timer allows a total of two minutes to remove the cache module. If you exceed two minutes, “this controller” will exit FRUTIL and resume operations. If this happens, return to step 3.

8. Disengage both retaining levers and partially remove the “other controller’s” cache module—about half way.
9. Disable the ECB by pressing the battery disable switch until the status light stops blinking—about five seconds.

CAUTION: The ECB must be disabled—the status light is not lit and is not blinking—before disconnecting the ECB cable from the cache module. Failure to disable the ECB could result in cache module damage.

10. Disconnect the ECB cable from the “other controller’s” cache module, remove the cache module, and place it onto a grounded antistatic mat or into an antistatic bag.

    Once the cache module is removed, FRUTIL displays the following:

```
Restarting all device ports. Please wait...
  Device Port 1 restarted.
  Device Port 2 restarted.
  Device Port 3 restarted.
  Device Port 4 restarted.
  Device Port 5 restarted.
  Device Port 6 restarted.
Do you have a replacement cache module? Y/N
```

11. Enter N(o) if you don’t have a replacement cache module; FRUTIL will exit. Disconnect the PC or terminal from the controller’s maintenance port.

    Enter Y(es) if you have a replacement cache module and want to install it now. FRUTIL displays the following:

    ```
    Insert the slot A [or B] cache module? Y/N
    ```

    NOTE: Remove the DIMMs from the cache module. They will be installed in the replacement cache module.

12. Press down on the DIMM retaining levers at either end of the DIMM you want to remove.
13. Grasp the DIMM and gently remove it from the DIMM slot. Repeat for all DIMMs.

    NOTE: If you entered Y(es) in step 11 above, go to step 6 on page 2–38.

Installing a Cache Module in a Dual-Redundant Controller Configuration

Use the following steps to install a cache module:

CAUTION: ESD can easily damage a cache module or a DIMM. Wear a snug-fitting, grounded ESD wrist strap.

---

1. Connect a PC or terminal to the operational controller’s maintenance port. The controller to which you’re connected is “this controller”; the controller that you’re installing is the “other controller.”
2. Start FRUTIL with the following command:

    ```
    RUN FRUTIL
    ```

    FRUTIL displays the following:

    ```
    Do you intend to replace this controller’s cache battery? Y/N
    ```

3. Enter N(o). FRUTIL displays the FRUTIL Main menu:

```
FRUTIL Main Menu:
 1. Replace or remove a controller or cache module
 2. Install a controller or cache module
 3. Replace a PVA module
 4. Replace an I/O module
 5. Exit
Enter choice: 1, 2, 3, 4, or 5 ->
```

4. Enter option 2, *Install a controller or cache module*, from the FRUTIL Main menu. FRUTIL displays the Install Options menu:

```
Install Options:
 1. Other controller and cache module
 2. Other controller module
 3. Other cache module
 4. Exit
Enter choice: 1, 2, 3, or 4 ->
```

5. Enter option 3, *Other cache module*, from the Install Options menu. FRUTIL display the following:

```
Insert the slot A [or B] cache module? Y/N
```

NOTE: Use the DIMMs that were removed from the old cache module for the replacement cache module.

6. Insert the DIMM straight into the socket in the replacement cache module and ensure that the notches in the DIMM align with the tabs in the socket (see Figure 2–12).
7. Press the DIMM gently until it’s seated in the socket.
8. Double-check to ensure both ends of the DIMM are firmly seated in the slot and both retaining clips engage the DIMM. Repeat for all DIMMs.

9. Enter Y(es) and press return. FRUTIL displays the following:

```
Quiescing all device ports.  Please wait...
  Device Port 1 quiesced.
  Device Port 2 quiesced.
  Device Port 3 quiesced.
  Device Port 4 quiesced.
  Device Port 5 quiesced.
  Device Port 6 quiesced.
 All device ports quiesced.
.
.
.
Perform the following steps:
 1. Turn off the battery for the new cache module by pressing
    the battery’s shut off button for five seconds
 2. Connect the battery to the new cache module.
 3. Insert the new cache module in slot A [or B] within 2
    minutes.
```

NOTE: A countdown timer allows a total of two minutes to install the cache module. If you exceed two minutes, “this controller” will exit FRUTIL and resume operations. If this happens, return to step 2.

CAUTION: Make sure you align the cache module in the appropriate guide rails. If you do not align the cache module correctly, damage to the backplane can occur.

---

10. Disable the ECB to which you’re connecting the new cache module by pressing the battery disable switch until the status light stops blinking—about five seconds.

CAUTION: The ECB must be disabled—the status light is not lit and is not blinking—before connecting the ECB cable to the cache module. Failure to disable the ECB could result in ECB damage.

---

11. Connect the ECB cable to the new cache module.
12. Insert the new cache module into its slot and engage its retaining levers.

NOTE: In mirrored mode, FRUTIL will initialize the mirrored portion of the new cache module, check for old data on the cache module, and then restart all device ports. After the device ports have been restarted, FRUTIL will test the cache module and the ECB. After the test completes, the device ports will quiesce and a mirror copy of the cache module data will be created on the newly installed cache module.

13. FRUTIL will restart the other controller. FRUTIL displays the following:

```
Please wait . . .
If the other controller did not restart, press its reset button.

Field Replacement Utility terminated.
```

14. If the other controller did not restart, press its reset button.
15. Enable failover, and re-establish the dual-redundant configuration with the following command:

```
SET FAILOVER COPY=THIS_CONTROLLER
```

This command copies the subsystem’s configuration from “this controller” to the “other controller.”

16. Disconnect the PC or terminal from the controller’s maintenance port.

Replacing an External Cache Battery Storage Building Block

The External Cache Battery (ECB) Storage Building Block (SBB) can be replaced with cabinet power on or off. An ECB SBB is shown in Figure 2–7. The single-battery configuration contains one battery and the dual-battery configuration contains two batteries.

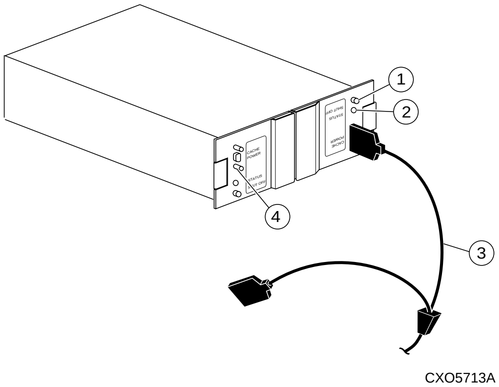

Figure 2–7. ECB SBB Configuration

Table 2–5 ECB SBB Configuration

Location	Description
①	**Battery disable switch**
②	**Status LED**
③	**ECB Y cable**
④	**Faceplate and controls for second battery** **(dual-battery configuration only)**

Replacing an External Cache Battery Storage Building Block With Cabinet Powered On

Use the following steps to replace the ECB SSB with the cabinet powered on:

NOTE: The procedure for a dual-redundant controller configuration assumes that a single ECB SBB with a dual battery is installed and an empty slot is available for the replacement ECB SBB. If an empty slot is not available, place the new ECB SBB on the top of the enclosure. After the old ECB SBB has been removed, carefully insert the new ECB SBB into the empty slot.

1. Connect a PC or terminal to the controller with the ECB SBB that you intend to replace. The controller to which you're connected is "this controller."
2. Start FRUTIL with the following command:

   ```
   RUN FRUTIL
   ```

   FRUTIL displays the following:

   ```
   Do you intend to replace this controller's cache battery? Y/N
   ```

3. Enter Y(es). FRUTIL displays the following:

   ```
   If the batteries were replaced while the cabinet was powered
   down, press return.
   Otherwise follow this procedure:
   WARNING: Ensure that at least one battery is connected to the
   Y cable at all times during this procedure.
   1.Connect the new battery to the unused end of the 'Y' cable
     attached to cache A [or B].
   2.Disconnect the old battery.  Do not wait for the new
     battery's status light to turn solid green.
   3.Press return.
   ```

   CAUTION: The ECB cable has a 12-volt and a 5-volt pin. Improper handling or misalignment when connecting or disconnecting could cause these pins to contact ground, resulting in cache module damage.

4. Insert the new ECB SBB into the empty battery slot.

NOTE: If an empty slot is not available, place the new ECB SBB on the top of the enclosure.

5. Connect the new battery to the unused end of the Y cable attached to cache A [*or B*]
6. Disconnect the old battery. Do not wait for the new battery's status light to turn solid green.
7. Press return.

   FRUTIL displays the following:

   ```
   Updating this battery’s expiration date and deep discharge history.
   Field Replacement Utility terminated.
   ```

8. Disconnect the PC or terminal from the controller's maintenance port.
9. If this is a dual-redundant controller configuration and you installed a dual-battery ECB SBB and you want to connect the other cache module to the new ECB SBB, connect the PC or terminal to the other controller's maintenance port. The controller to which you're now connected is "this controller."
10. Repeat steps 2 through 8.
11. Remove the old ECB SBB.

NOTE: If an empty slot was not available, and the new ECB SBB was placed on the top of the enclosure, carefully insert it now into the empty slot.

Replacing an External Cache Battery Storage Building Block With Cabinet Powered Off

Use the following steps to replace the ECB SSB with the cabinet powered off:

1. If the controller and cache module are not operating, go to step 4. Otherwise, go to the next step.
2. Connect a PC or terminal to the controller's maintenance port. The controller to which you're connected is "this controller."

3. Shut down the controllers. In single-controller configurations, shut down “this controller.” In dual-redundant controller configurations, shut down the “other controller” first, then shut down “this controller” with the following commands:

   ```
   SHUTDOWN OTHER_CONTROLLER
   ```

   ```
   SHUTDOWN THIS_CONTROLLER
   ```

   When the controllers shut down, their reset buttons and their first three LEDs are lit continuously. This may take several minutes, depending on the amount of data that needs to be flushed from the cache modules.
4. Turn off the power to the subsystem.
5. Insert the new ECB SBB into its slot.

   CAUTION: The ECB cable has a 12-volt and a 5-volt pin. Improper handling or misalignment when connecting or disconnecting could cause these pins to contact ground, resulting in cache module damage.

6. Connect the open end of the ECB Y cable to the new ECB.
7. Restore power to the subsystem. The controller automatically restarts.
8. Disconnect the ECB cable from the old ECB.
9. Start FRUTIL with the following command:

   ```
   RUN FRUTIL
   ```

   FRUTIL displays the following:

   ```
   Do you intend to replace this controller’s cache battery? Y/N
   ```

10. Type Y(es). FRUTIL displays the following:

```
If the batteries were replaced while the cabinet was powered
down, press return.
Otherwise follow this procedure:
WARNING: Ensure that at least one battery is connected to the
Y cable at all times during this procedure.
1.Connect the new battery to the unused end of the ’Y’ cable
  attached to cache A [or B].
2.Disconnect the old battery.  Do not wait for the new
  battery’s status light to turn solid green.
3.Press return.
```

11. Press return.

    FRUTIL displays the following:

```
Updating this battery’s expiration date and deep discharge history.
Field Replacement Utility terminated.
```

12. Disconnect the PC or terminal from the controller’s maintenance port.
13. In a dual-redundant controller configuration and if the ECB was replaced for both cache modules, connect the PC or terminal to the other controller’s maintenance port. The controller to which you’re now connected is “this controller.”
14. Repeat steps 9 through 12.
15. Remove the old ECB SBB.

Replacing a Gigabit Link Module (GLM)

Use the following steps in “Removing a GLM” and “Installing a GLM” to replace a GLM in a controller. Figure 2–8 shows the location and orientation of the GLMs.

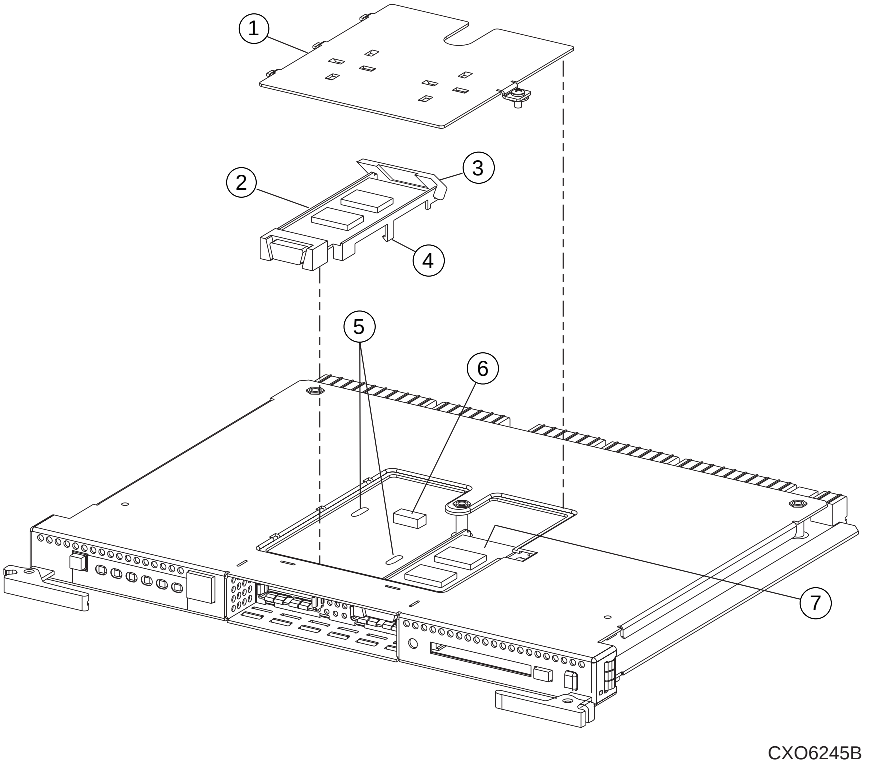

Figure 2–8. Location of GLMs in Controller

Table 2–6 Description of the Gigabit Link Module (GLM)

Location	Description
①	**Access Door**
②	**Port 1 GLM**
③	**Release Lever**
④	**Locking Tab**
⑤	**Guide Holes**
⑥	**GLM Connector**
⑦	**Port 2 GLM**

Removing a GLM

Use the following steps to remove a GLM:

1. Remove the controller using either the steps in “Removing the Controller in a Single-Controller Configuration,” page 2–12, or “Removing a Controller in a Dual-Redundant Controller Configuration,” page 2–28.
2. Remove the screw that secures the access door on the top of the controller.
3. Remove the access door, and set it aside.

CAUTION: ESD can easily damage a GLM. Wear a snug-fitting, grounded ESD wrist strap.

4. Disengage the GLM’s locking tabs that protrude through the guide holes on the bottom side of the controller.
5. Use your index finger and thumb to operate the release lever on the exposed end of the GLM. Press the lower end of the release lever with your index finger while pulling the raised end of the release lever up with your thumb.
6. Remove the GLM.

Installing a GLM

Use the following steps to remove a GLM:

NOTE: Before inserting the new GLM, note the holes in the board where the GLM will reside.

CAUTION: ESD can easily damage a GLM. Wear a snug-fitting, grounded ESD wrist strap.

---

1. Insert the new GLM by first placing the cable connection end of the GLM through the opening on the front of the controller.
2. Line up the locking tab on the bottom of the replacement GLM with the holes in the board, and press firmly to seat the GLM.
3. Press the release lever firmly into place to secure the GLM.
4. Install the access door on the top of the controller and secure it with the screw.
5. Install the controller using either the steps in “Installing the Controller in a Single-Controller Configuration,” page 2–14, or “Installing a Controller in a Dual-Redundant Controller Configuration,” page 2–31.

Replacing a PVA Module

Use the following steps to replace a PVA module in the master enclosure (ID 0), the first expansion (ID 2), or second expansion enclosure (ID 3). The master enclosure contains the controllers and the cache modules.

NOTE: This procedure is not applicable for the M1 shelf.

The HSG80 controller can support up to three enclosures: the master enclosure, the first expansion enclosure, and the second expansion enclosure.

A PVA can be replaced in either a single or a dual-redundant controller configuration using this procedure.

1. Connect a PC or terminal to the controller’s maintenance port.
2. In a dual-redundant controller configuration, disable failover with the following command:

   ```
   SET NOFAILOVER
   ```

3. Start FRUTIL with the following command:

   ```
   RUN FRUTIL
   ```

   FRUTIL displays the following:

   ```
   Do you intend to replace this controller’s cache battery? Y/N
   ```

4. Enter N(o). FRUTIL displays the FRUTIL Main menu:

   ```
   FRUTIL Main Menu:
    1. Replace or remove a controller or cache module
    2. Install a controller or cache module
    3. Replace a PVA module
    4. Replace an I/O module
    5. Exit
   Enter choice: 1, 2, 3, 4, or 5 ->
   ```

5. Enter option 3, *Replace a PVA module* from the FRUTIL Main menu. FRUTIL displays the PVA Replacement menu:

   ```
   FRUTIL PVA Replacement Menu:
    1. Master Enclosure (ID 0)
    2. First Expansion Enclosure (ID 2)
    3. Second Expansion Enclosure (ID 3)
    4. Exit
   Enter Choice: 1, 2, 3, or 4 ->
   ```

   NOTE: The HSG80 controller supports up to three enclosures. The FRUTIL PVA Replacement Menu has options for three enclosures regardless of how many enclosures are connected.

6. Enter option 1, *Master Enclosure (ID 0)*, to replace the PVA in the master enclosure; enter option 2, *First Expansion Enclosure (ID 2)*, to replace the PVA in the first expansion enclosure; or enter option 3, *Second Expansion Enclosure (ID 3)*, to replace the PVA in the second expansion enclosure from the FRUTIL PVA Replacement menu. FRUTIL displays the following:

   ```
   Do you have a replacement PVA module? Y/N
   ```

7. Enter Y(es) and press return. FRUTIL displays the following:

   ```
   Ensure the replacement PVA’s address is set to zero [or 2 or 3].
   Press return to quiesce device port activity.
   ```

8. Set the replacement PVA’s address to zero for the master enclosure, to 2 for the first expansion enclosure, or to 3 for the second expansion enclosure.

9. Press return and wait for FRUTIL to quiesce the device ports. This may take several minutes. FRUTIL displays the following:

   ```
   All device ports quiesced.
   Replace the PVA in the master cabinet.
   Press return to resume device port activity.
   ```

10. Remove the old PVA and install the new PVA.

11. Press return to resume device port activity and restart the other controller. When all port activity has restarted, FRUTIL displays the following:

```
PVA replacement complete.

Please wait . . .
If the other controller did not restart, press its reset button.

Field Replacement Utility terminated.
```

12. If the other controller did not restart, press its reset button.
13. Enable failover and re-establish the dual-redundant configuration with the following command:

```
SET FAILOVER COPY=THIS_CONTROLLER
```

    This command copies the subsystem's configuration from "this controller" to the "other controller."

14. Disconnect the PC or terminal from the controller's maintenance port.

Replacing an I/O Module

Figure 2–9 shows a rear view of the BA370 enclosure and the relative location of the six I/O modules (also referred to as ports). Figure 2–10 shows the six I/O modules and the location of the connectors and securing screws. Use the following steps to replace an I/O module:

NOTE: This procedure is not applicable for the M1 shelf.

An I/O module can be replaced in either a single-controller or a dual-redundant controller configuration using this procedure.

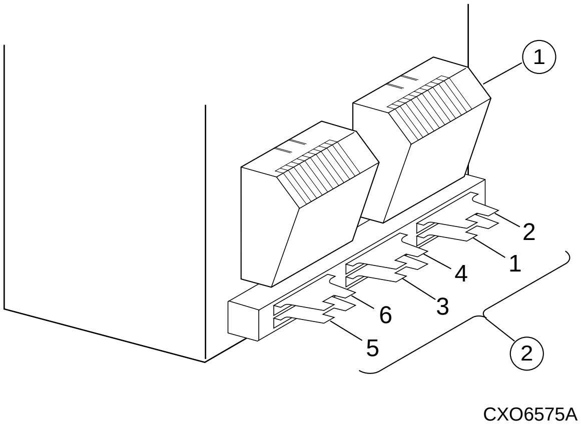

Figure 2–9. I/O Module Locations in a BA370 Enclosure

Table 2–7 Description of I/O Modules in a BA370 Enclosure

Location	Description
①	**Fans**
②	**I/O Modules (6 each)**

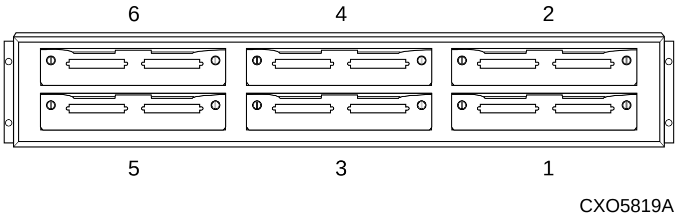

Figure 2–10. I/O Module Locations

NOTE: The controller can function with one failed I/O module.

1. Connect a PC or terminal to the controller’s maintenance port.
2. In a dual-redundant controller configuration, disable failover with the following command:

   ```
   SET NOFAILOVER
   ```

3. Start FRUTIL with the following command:

   ```
   RUN FRUTIL
   ```

   FRUTIL displays the following:

   ```
   Do you intend to replace this controller’s cache battery? Y/N
   ```

4. Enter N(o). FRUTIL displays the FRUTIL Main menu:

   ```
   FRUTIL Main Menu:
    1. Replace or remove a controller or cache module
    2. Install a controller or cache module
    3. Replace a PVA module
    4. Replace an I/O module
    5. Exit
   Enter choice: 1, 2, 3, 4, or 5 ->
   ```

NOTE: The HSG80 controller supports up to three enclosures. The I/O Module status can show the following states: Single Ended – OK, Differential – OK, Termination only – OK, Missing or bad, Unknown or bad, or N/A (cabinet is not present).

5. Enter option 4, *Replace an I/O module*, from the FRUTIL Main menu. In the following example, cabinet 0, port 5 is missing or bad. FRUTIL displays the following:

```
I/O Module Status:
         Cabinet 0              Cabinet 2           Cabinet 3
       ------------------    ----------------    ------------------
Port 1:  Single Ended - OK      N/A                  N/A
Port 2:  Single Ended - OK      N/A                  N/A
Port 3:  Single Ended - OK      N/A                  N/A
Port 4:  Single Ended - OK      N/A                  N/A
Port 5:  Missing or bad         N/A                  N/A
Port 6:  Single Ended - OK      N/A                  N/A
Is the replacement I/O module available? Y/N
```

6. Enter Y(es) and press return.
7. Wait for FRUTIL to quiesce the device ports. After the ports have been quiesced (this may take several minutes), FRUTIL displays the following:

```
All device ports quiesced.

Press return when the new I/O module is installed.
```

CAUTION: If you remove the incorrect module, the controller will crash.

---

8. Disconnect the cables (there may be one or two) from the appropriate I/O module.
9. Remove the failed I/O module.
10. Install a new I/O module.
11. Connect the cables (there may be one or two) to the I/O module.
12. Press return to resume device port activity and restart the other controller. When all port activity has restarted, FRUTIL displays the following:

```
I/O module replacement complete.

Please wait . . .
If the other controller did not restart, press its reset button.
```

13. If the other controller did not restart, press its reset button.
14. Enable failover and re-establish the dual-redundant configuration with the following command:

    ```
    SET FAILOVER COPY=THIS_CONTROLLER
    ```

    This command copies the subsystem's configuration from "this controller" to the "other controller."
15. Disconnect the PC or terminal from the controller's maintenance port.

Replacing an EMU

Use the following steps in “Removing an EMU” and “Installing an EMU” to replace the EMU.

Removing an EMU

1. From a host console, stop all host activity and dismount the logical units in the subsystem.
2. Connect a PC or terminal to the maintenance port of one of the controllers in your subsystem.
3. Shut down the controllers. In single controller configurations, you only need to shut down “this controller.” In dual-redundant controller configurations, shut down the “other controller” first, then shut down “this controller” with the following commands:

   ```
   SHUTDOWN OTHER_CONTROLLER
   SHUTDOWN THIS_CONTROLLER
   ```

   When the controllers shut down, their reset buttons and their first three LEDs are lit continuously. This may take several minutes, depending on the amount of data that needs to be flushed from the cache modules.
4. Turn off all the ac input boxes for each enclosure.

   CAUTION: ESD can easily damage an EMU. Wear a snug-fitting, grounded ESD wrist strap.

5. Disengage both retaining levers and remove the EMU.

Installing an EMU

△ **CAUTION:** ESD can easily damage an EMU. Wear a snug-fitting, grounded ESD wrist strap.

Make sure you align the EMU in the appropriate guide rails. If you do not align the EMU correctly, damage to the backplane can occur

---

△ **CAUTION:** After installing the EMU, check the SCSI ID number on the master enclosure to make sure it represents the correct enclosure number (ID 0). If the SCSI ID number is different from the original enclosure setting, reset the number to ID 0 before starting the controller.

---

1. Align the EMU in the top, left-hand slot and insert it.
2. Insert the EMU into its slot until the extractor latches engage the enclosure, then Engage its retaining levers to secure the EMU.
3. Verify that the master enclosure SCSI ID number represents ID 0. If it has changed, reset it to ID 0.
4. If there are no expansion enclosures, go to step 6.

   If there are expansion enclosures, turn on all the ac input boxes for each expansion enclosure.
5. Turn on all the ac input boxes for the master enclosure.
6. If not already connected, connect a PC or terminal to the controller’s maintenance port.
7. Mount the logical units on the host. If you are using a Windows NT platform, restart the server.
8. Set the subsystem date and time with the following command:

   ```
   SET THIS_CONTROLLER TIME=dd-mmm-yyyy:hh:mm:ss
   ```
9. Disconnect the PC or terminal from the controller’s maintenance port.

Replacing DIMMs

Use the following steps in “Removing DIMMs” and “Installing DIMMs” to replace DIMMs in a cache module. The cache module may be configured as shown in Figure 2–11 and Table 2–8.

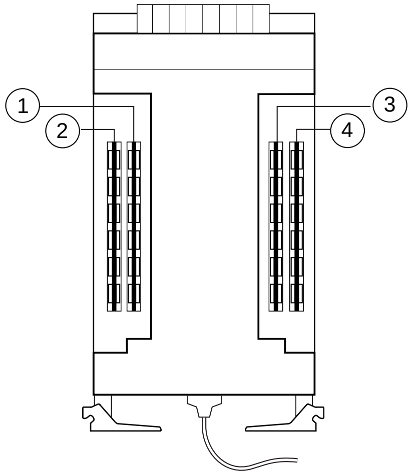

Figure 2–11. Cache-Module Memory Configurations

Table 2–8 Cache Module Memory Configurations

Memory	DIMMs	Quantity	Location
64 MB	32 MB	2	① ③
128 MB	32 MB	4	① ② ③ ④
256 MB	128 MB	2	① ③
512 MB	128 MB	4	① ② ③ ④

NOTE: If a DIMM fails, note which DIMM you need to replace based on the diagram that displays on the console.

CAUTION: ESD can easily damage a cache module or a DIMM. Wear a snug-fitting, grounded ESD wrist strap.

Removing DIMMs

Use the following steps to remove a DIMM from a cache module:

1. Remove the cache module using the steps in either “Removing the Cache Module in a Single-Controller Configuration,” page 2–16, or “Removing a Cache Module in a Dual-Redundant Controller Configuration,” page 2–34.
2. Press down on the DIMM retaining levers at either end of the DIMM you want to remove.
3. Grasp the DIMM and gently remove it from the DIMM slot.

Installing DIMMs

Use the following steps to install a DIMM in a cache module:

1. Insert the DIMM straight into the socket and ensure that the notches in the DIMM align with the tabs in the socket (see Figure 2–12).
2. Press the DIMM gently until it’s seated in the socket.
3. Double-check to ensure both ends of the DIMM are firmly seated in the slot and both retaining clips engage the DIMM.
4. Install the cache module using the steps in either “Installing the Cache Module in a Single-Controller Configuration,” page 2–17, or “Installing a Cache Module in a Dual-Redundant Controller Configuration,” page 2–37.

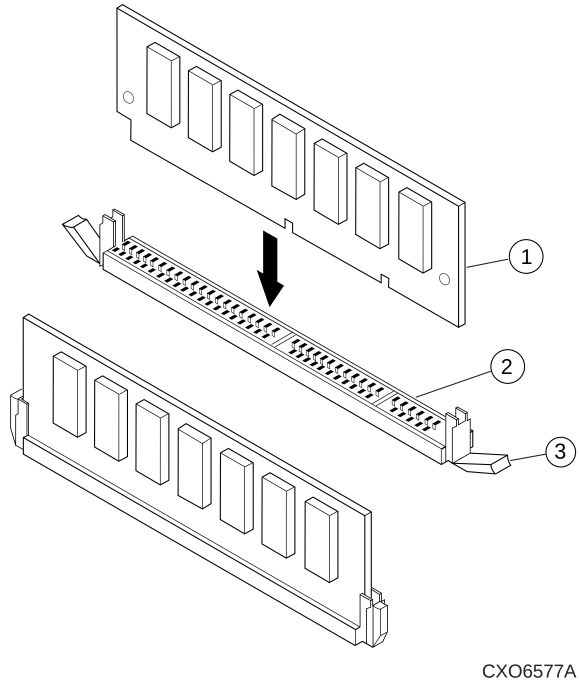

Figure 2–12. DIMM Components

Table 2–9 DIMM Components

Location	Description
①	**DIMM**
②	**DIMM Slot**
③	**DIMM Retaining Clip**

Replacing a Fiber Cable, Switch, or Hub

Use the following steps in “Remove a Fiber Cable, Switch, or Hub” and “Install a Fiber Cable. Switch, or Hub” to replace a fiber cable, or to replace the switch or hub.

Remove a Fiber Cable, Switch, or Hub

Use the following steps to remove a cable connected to either side of your switch or hub, or to remove the switch or hub:

1. Shut down the host system.
2. Shut down the controllers. In single-controller configurations, shut down “this controller.” In dual-redundant controller configurations, shut down the “other controller” first, then shut down “this controller” with the following commands:

   ```
   SHUTDOWN OTHER_CONTROLLER
   SHUTDOWN THIS_CONTROLLER
   ```

   When the controllers shut down, their reset buttons and their first three LEDs are lit continuously. This may take several minutes, depending on the amount of data that needs to be flushed from the cache modules.
3. If you are replacing a cable, unplug the failed cable at each end using needle nose pliers (see inset on Figure 2–6). If you are replacing a switch or hub, unplug all of the cables connected to the switch or hub.

Install a Fiber Cable. Switch, or Hub

Use the following steps to install a cable connected to either side of your switch or hub, or to install the switch or hub:

1. If you are replacing a cable, plug the replacement cable into the ports that the removed cable was plugged into.

   If you are replacing a switch or hub, plug all of the cables that were unplugged from the removed switch or hub into the replacement switch or hub.
2. Push both reset buttons to restart the controllers.

   The controllers automatically restart. Your subsystem is now ready for operation.

Replacing a PCMCIA Card

Use the following steps to replace a PCMCIA (program) card (see Figure 2–13):

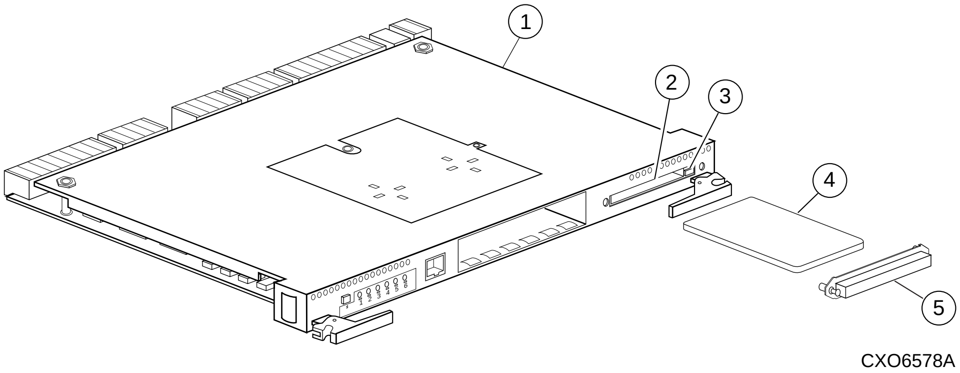

Figure 2–13. PCMCIA Card

Table 2–10 PCMCIA Card

Location	Description
①	**Controller**
②	**Program-card slot**
③	**Program-card ejection button**
④	**Program card**
⑤	**ESD/PCMCIA card cover**

CAUTION: The new PCMCIA card must have the same software version as the PCMCIA card being replaced. See Chapter 3, “Upgrading the Subsystem,” for more information.

CAUTION: After changing the PCMCIA card, check the SCSI ID number on the master enclosure to make sure it represents the correct enclosure number (ID 0). If the SCSI ID number is different from the original enclosure setting, reset the number to ID 0 before starting the controller.

1. From a host console, stop all host activity and dismount the logical units in the subsystem.
2. Connect a maintenance PC or terminal to one of the controllers’ maintenance port in your subsystem.
3. Shut down the controllers. In single-controller configurations, shut down “this controller.” In dual-redundant controller configurations, shut down the “other controller” first, then shut down “this controller” with the following commands:

   ```
   SHUTDOWN OTHER_CONTROLLER
   SHUTDOWN THIS_CONTROLLER
   ```

   When the controllers shut down, their reset buttons and their first three LEDs are lit continuously. This may take several minutes, depending on the amount of data that needs to be flushed from the cache modules.
4. Remove the ESD program card cover on “this controller.”
5. Press and hold the reset button while ejecting the program card from “this controller” by pressing the program-card eject button.
6. Press and hold the reset button while inserting the new program card; “this controller” automatically restarts. The controller is ready to handle I/O when the CLI is responsive.
7. Replace the ESD program card cover on “this controller.”

   The controller restarts. Your subsystem is now ready for operation.
8. Verify that the master enclosure SCSI ID number represents ID 0. If it has changed, reset it to ID 0.
9. In a dual-redundant controller configuration, repeat steps 4 through 7 for the “other controller.”

Replacing a Failed Storageset Member

If a disk drive fails in a RAIDset or mirrorset, the controller automatically places it into the failedset. If the spareset contains a replacement drive that satisfies the storageset's replacement policy, the controller automatically replaces the failed member with the replacement drive. If the spareset is empty or doesn't contain a satisfactory drive, the controller simply "reduces" the storageset so that it can operate without one of its members.

The storageset remains in this reduced state until the spareset contains a satisfactory drive. When the controller senses a satisfactory drive in the spareset, it automatically places the drive into the storageset and restores the storageset to normal. Therefore, replacing a failed storageset member means putting a satisfactory drive into the spareset.

Removing a Failed RAIDset or Mirrorset Member

Use the following steps to remove a failed RAIDset or mirrorset member:

1. Connect a PC or terminal to the maintenance port of the controller that accesses the reduced RAIDset or mirrorset.
2. Enable AUTOSPARE with the following command:

   ```
   SET FAILEDSET AUTOSPARE
   ```

   With AUTOSPARE enabled, any new disk drive—one that has not been in an array before—that you insert into the PTL location of a failed disk drive is automatically initialized and placed into the spareset.
3. Remove the failed disk drive.

Installing the New Member

Use the following steps to install a new member:

1. Insert a new disk drive that satisfies the replacement policy of the reduced storageset into the PTL location of the failed disk drive.

   NOTE: The controller automatically initializes the new disk drive and places it into the spareset. As soon as it becomes a member of the spareset, the controller automatically uses the new disk drive to restore the reduced RAIDset or mirrorset. If initialization fails, the new disk drive is placed into the failedset.

Chapter 3
Upgrading the Subsystem

This chapter provides instructions for upgrading the controller software, installing software patches, upgrading firmware on a device, upgrading from a single-controller configuration to a dual-redundant controller configuration, and upgrading cache memory.

Required Tools

You will need the following tools to service the controller, cache module, and the external cache battery (ECB):

- An antistatic wrist strap.
- An antistatic mat on which to place modules during upgrading.
- A Storage Building Block (SBB) Extractor for removing StorageWorks building blocks. This tool is not required, but it will enable you to perform more efficiently.

Electrostatic Discharge

Electrostatic discharge (ESD) is a common problem and may cause data loss, system down time, and other problems. The most common source of static electricity is the movement of people in contact with carpets and clothing. Low humidity also increases the amount of static electricity. You must discharge all static electricity prior to touching electronic equipment. Follow the precautions in the “Electrostatic Discharge Precautions” given in the Preface whenever you are installing any component.

Upgrading Controller Software

You can upgrade the controller’s software two ways:

- Install a new program card (see Figure 3–1) that contains the new software.
- Download a new software image, and use the menu-driven Code Load/Code Patch (CLCP) utility to write it onto the existing program card. You may also use this utility to install, delete, and list patches to the controller software.

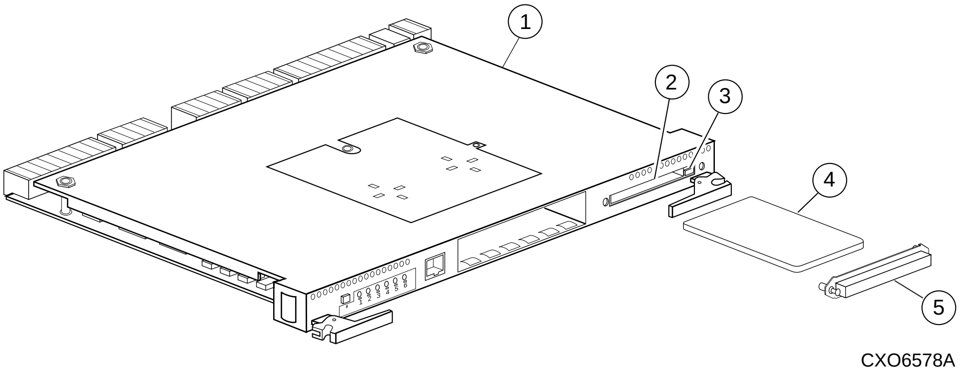

Figure 3–1. PCMCIA Card

Table 3–1 PCMCIA Card

Location	Description
①	**Controller**
②	**Program-card slot**
③	**Program-card ejection button**
④	**Program card**
⑤	**ESD/PCMCIA card cover**

Installing a New Program Card

Use the following steps to install a program card that contains the new software. If you're only upgrading the software in a single-controller configuration, disregard references to the "other controller" and read the plural controllers as the singular controller.

△ **CAUTION:** After changing the PCMCIA card, check the SCSI ID number on the master enclosure to make sure it represents the correct enclosure number (ID 0). If the SCSI ID number is different from the original enclosure setting, reset the number to ID 0 before starting the controller.

To upgrade the software by installing a new program card:

1. From the host console, dismount the storage units in the subsystem.
2. Connect a PC or terminal to one of the controllers' maintenance port.
3. Shut down the controllers. In single-controller configurations, shut down "this controller." In dual-redundant controller configurations, shut down the "other controller" first, then shut down "this controller" with the following commands:

   ```
   SHUTDOWN OTHER_CONTROLLER
   SHUTDOWN THIS_CONTROLLER
   ```

   When the controllers shut down, their reset buttons and their first three LEDs are lit continuously. This may take several minutes, depending on the amount of data that needs to be flushed from the cache modules.

△ **CAUTION:** Do not change the subsystem's configuration or replace any of its modules until you've completed this procedure to upgrade the controller software.

---

4. Remove the program card's ESD cover on "this controller."
5. Press and hold the reset button while ejecting the program card from "this controller" by pressing the program card eject button.

6. Press and hold the reset button while inserting the new program card; “this controller” automatically restarts. The controller is ready to handle I/O when the CLI is responsive.
7. Replace the ESD program card cover on “this controller.”
8. Verify that the master enclosure SCSI ID number represents ID 0. If it has changed, reset it to ID 0.
9. In a dual-redundant controller configuration, repeat steps 4 through 7 for the “other controller.”
10. Mount the storage units on the host.

Downloading New Software

Use the CLCP to download new software to the program card while it’s installed in the controller. Use the following steps to upgrade the software with CLCP:

1. Obtain the new software image file from a customer service representative.

   NOTE: The image file can also be loaded by using StorageWorks Command Console (SWCC) (see the SWCC documentation).

2. Load the image onto a PC or workstation using its file- or network-transfer capabilities.
3. From a host console, quiesce all port activity and dismount the storage units in the subsystem.

   NOTE: Do not remove the program card.

4. Remove the ESD cover. If your program card is equipped with a write-protection switch, disable write-protection by sliding the switch to the left, as shown in Figure 3–2.
5. Connect a PC or terminal to the controller’s maintenance port.

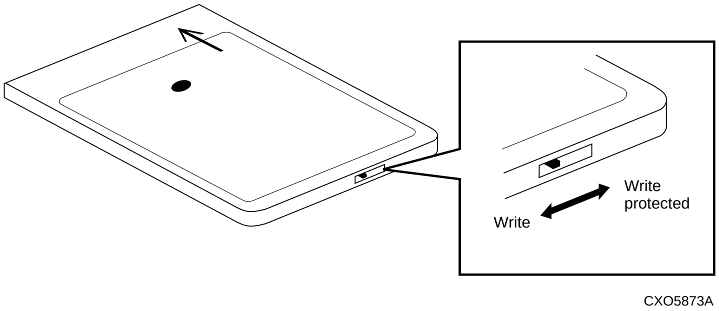

Figure 3–2. Location of Write-Protection Switch

6. Start CLCP with the following command:

```
RUN CLCP
```

CLCP displays the following:

```
Select an option from the following list:
Code Load & Patch local program Main Menu
0: Exit
1: Enter Code LOAD local program
2: Enter Code PATCH local program
3: Enter EMU Code LOAD Utility
Enter option number  (0..3) [0] ?
```

7. Enter option 1, *Enter Code LOAD local program*, from the CLCP Main menu to start the Code LOAD local program. CLCP displays the following:

```
You have selected the Code Load Utility.  This utility is used to load
a new software image into the program card currently inserted in the
controller.
Type ^Y or ^C (then RETURN) at any time to abort code load.
The code image may be loaded using SCSI Write Buffer commands through
the SCSI Host Port, or using KERMIT through the maintenance terminal
port.
        0: Exit
        1: Use the SCSI Host Port
        2: Use the Maintenance Terminal Port
  Enter option number (0..2) [0] ?
```

NOTE: You can use either the SCSI host port (if your operating system supports it) or the maintenance port. To use the SCSI host port, go to step 8. To use the maintenance port, go to step 10.

8. Enter option 1, *Use the SCSI Host Port,* from the menu. CLCP displays the following:

```
WARNING: proceeding with Controller Code Load will overwrite
     the current Controller code image with a new image.
     Do you want to continue (y/n) [n]: ?
```

9. Enter Y(es) and the download starts. When the download is complete, CLCP writes the new image to the program card and restarts the controller. This process takes one to three minutes. Go to step 15.

10. Enter option 2, *Use the Maintenance Terminal Port*, from the menu. CLCP displays the following:

    ```
    Perform the following steps before continuing:
      * get new image file on serial line host computer
      * configure KERMIT with the following parameters:
        terminal speed 19200 baud, eight bit, no parity, 1 stop bit
    It will take approximately 35 to 45 minutes to perform the code load
    operation.
    WARNING: proceeding with Controller Code Load will overwrite
             the current Controller code image with a new image.
             Do you want to continue (y/n) [n]: ?
    ```

11. Enter Y(es) and CLCP displays:

    ```
    Start KERMIT now...
    ```

12. Connect the PC to the controller's maintenance port.
13. Configure the KERMIT transfer protocol on the PC to 19200 baud, eight bits, no parity, and one stop bit.
14. Use KERMIT to transfer the binary image from the PC to the controller.

    When the download is complete, CLCP automatically writes the new image to the program card and restarts the controller.

15. Verify that the controller is running the new software version with the following command:

    ```
    SHOW THIS CONTROLLER
    ```

16. If your program card is equipped with a write-protection switch, re-enable write-protection by sliding the switch to the right.
17. Replace the program card's ESD cover.
18. Repeat the procedure to upgrade the other controller in dual-redundant subsystems.
19. Mount the storage units in the subsystem.

Using CLCP to Install, Delete, and List Software Patches

Use CLCP to manage software patches. These small programming changes are placed into the controller’s non-volatile memory and become active as soon you restart the controller. There is space for about ten patches, depending upon the size of the patches you’re installing.

Keep the following points in mind while installing or deleting patches:

- Patches are associated with specific software versions. CLCP verifies the patch against the currently installed version.
- Patches are sequential: patch one must be entered before patch two, and so on.
- Deleting one patch also deletes all higher-numbered patches. For example, if you delete patch two, you’ll automatically delete patches three, four, and so on.
- Controllers in a dual-redundant configuration must have the same patches. You must install patches into each controller separately.

Installing a Software Patch

Use the following steps to install a software patch:

1. Obtain the patch file from a customer service representative or via the Internet at: http://www.storage.digital.com/menusupport.htm.
2. Connect a PC or terminal to the controller’s maintenance port.
3. From the host console, quiesce all port activity.
4. Start CLCP with the following command:

```
RUN CLCP
```

CLCP displays the following:

```
Select an option from the following list:
Code Load & Patch local program Main Menu
0: Exit
1: Enter Code LOAD local program
2: Enter Code PATCH local program
3: Enter EMU Code LOAD utility
Enter option number  (0..3) [0] ?
```

5. Enter option 2, *Enter Code PATCH local program*. CLCP displays the following:

```
You have selected the Code Patch local program.  This program is used
to manage software code patches.  Select an option from the following
list:
Type ^Y or ^C (then RETURN) at any time to abort Code Patch.
Code Patch Main Menu
      0: Exit
      1: Enter a Patch
      2: Delete Patches
      3: List Patches
Enter option number (0..3) [0] ?
```

6. Enter option 1, *Enter a Patch*, to install a patch. CLCP displays the following:

```
This is the Enter a Code Patch option.  The program prompts you for
the patch information, one line at time.  Be careful to enter the
information exactly as it appears on the patch release. Patches may
be installed for any version of software; however, patches entered
for software versions other than XXXXX are not applied until the
matching version of software is installed.
To enter any patch, you must first install all patches with lower
patch numbers than the patch you are entering, beginning with patch
number 1, for a specific software version. If you incorrectly enter
the patch information, you are given the option to review the patch
one line at a time.
Type ^Y or ^C (then RETURN) at any time to abort Code Patch.
Do you wish to continue (y/n) [y] ?
```

7. Enter Y(es) and follow the on-screen prompts.
8. After the patch is installed, press the controller's reset button to restart the controller.

Deleting a Software Patch

Use the following steps to delete a software patch:

1. From a host console, quiesce all port activity.
2. Connect a PC or terminal to the controller's maintenance port.
3. Start CLCP with the following command:

   ```
   RUN CLCP
   ```

   CLCP displays the following:

   ```
   Select an option from the following list:
   Code Load & Patch local program Main Menu
   0: Exit
   1: Enter Code LOAD local program
   2: Enter Code PATCH local program
   3: Enter EMU Code LOAD utility
   Enter option number  (0..3) [0] ?
   ```

4. Enter option 2, *Enter Code PATCH local program*. CLCP displays the following:

   ```
   You have selected the Code Patch local program.  This program is used
   to manage software code patches.  Select an option from the following
   list:
   Type ^Y or ^C (then RETURN) at any time to abort Code Patch.
   Code Patch Main Menu
         0: Exit
         1: Enter a Patch
         2: Delete Patches
         3: List Patches
   Enter option number (0..3) [0] ?
   ```

5. Enter option 2, *Delete Patches*, to delete patches. CLCP displays the following:

```
This is the Delete Patches option.  The program prompts you for the
software version and patch number you wish to delete.  If you select
a patch for deletion that is required for another patch, all dependent
patches are also selected for deletion.  The program lists your
deletion selections and asks if you wish to continue.
Type ^Y or ^C (then RETURN) at any time to abort Code Patch.
The following patches are currently stored in the patch area:
   Software Version - Patch number(s)
   xxxx               xxxx
Currently, xx% of the patch area is free.
Software Version of patch to delete?
```

6. Enter the software version of the patch to delete and press return. CLCP displays the following:

```
Patch Number to delete?
```

7. Enter the patch number to delete and press return. CLCP displays the following:

```
The following patches have been selected for deletion:
   Software Version - Patch #
   xxxx               xxxx
Do you wish to continue (y/n) [n] ?
```

8. Enter Y(es) and the patches are deleted. CLCP displays the following:

```
Code Patch Main Menu
      0: Exit
      1: Enter a Patch
      2: Delete Patches
      3: List Patches
Enter option number (0..3) [0] ?
```

9. Enter option 0, *Exit*.
10. Press the controller’s reset button to restart the controller.

Listing Software Patches

Use the following steps to list software patches:

1. Connect a PC or terminal to the controller's maintenance port.
2. Start CLCP with the following command:

   ```
   RUN CLCP
   ```

   CLCP displays the following:

   ```
   Select an option from the following list:
   Code Load & Patch local program Main Menu
   0: Exit
   1: Enter Code LOAD local program
   2: Enter Code PATCH local program
   3: Enter EMU Code LOAD utility
   Enter option number  (0..3) [0] ?
   ```

3. Enter option 2, *Enter Code PATCH local program*. CLCP displays the following:

   ```
   You have selected the Code Patch local program.  This program is used
   to manage software code patches.  Select an option from the following
   list:
   Type ^Y or ^C (then RETURN) at any time to abort Code Patch.
   Code Patch Main Menu
         0: Exit
         1: Enter a Patch
         2: Delete Patches
         3: List Patches
   Enter option number (0..3) [0] ?
   ```

4. Enter option 3, *List Patches*, to list patches. CLCP displays the following:

```
The following patches are currently stored in the patch area:
   Software Version - Patch number(s)
   xxxx               xxxx
Code Patch Main Menu
      0: Exit
      1: Enter a Patch
      2: Delete Patches
      3: List Patches
Enter option number (0..3) [0] ?
```

5. Enter option 0, *Exit*.

Upgrading Firmware on a Device

Use HSUTIL to upgrade a device with firmware located in contiguous blocks at a specific LBN on a source disk drive configured as a unit on the same controller. Upgrading firmware on a disk is a two-step process as shown in Figure 3–3: first, copy the new firmware from your host to a disk drive configured as a unit in your subsystem, then use HSUTIL to load the firmware onto the devices in the subsystem.

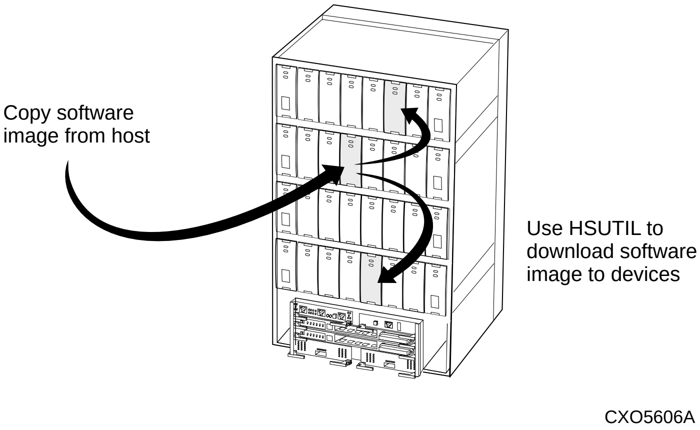

Figure 3–3. Upgrading Device Firmware

Keep the following points in mind while using HSUTIL to upgrade firmware on a device:

- HSUTIL has been tested with the qualified devices listed in the product-specific release notes that accompanied the software release. You may attempt to install firmware on unsupported devices—HSUTIL won’t prevent this—but if the upgrade fails, the device may be rendered unusable and therefore require the manufacturer’s attention.
- If the power fails or the bus is reset while HSUTIL is installing the new firmware, the device may become unusable. To minimize this possibility, DIGITAL recommends that you secure a reliable power source and suspend all I/O to the bus that services the device you’re upgrading.

- HSUTIL cannot install firmware on devices that have been configured as single disk drive units or as members of a storageset, spareset, or failedset. If you want to install firmware on a device that has previously been configured as a single disk drive, delete the unit number and storageset name associated with it.
- During the installation, the source disk drive is not available for other subsystem operations.
- Some devices may not reflect the new firmware version number when viewed from the “other” controller in a dual-redundant configuration. If you experience this, enter the following CLI command: CLEAR_ERRORS *device-name* UNKNOWN.
- Do not issue any CLI commands that access or inspect devices that are being formatted.

Use the following steps to upgrade firmware with HSUTIL:

1. Connect a PC or terminal to the maintenance port on the controller that accesses the device you want to upgrade.
2. Configure a single-disk unit.

   NOTE: In the next steps, you’ll copy the firmware image to this unit, then use HSUTIL to distribute it to the devices you’re upgrading. This unit must be a newly initialized disk with no label or file structure to ensure that the firmware image resides in contiguous blocks starting from LBN 0 or another known LBN. Additionally, write-back caching must be disabled (see *HSG80 ACS Version 8.x Configuration and CLI Reference Guide*).

3. Copy the firmware image to the single-disk unit that you configured in step 2. The firmware image must begin at a known LBN—usually 0—and must be contiguous. See the documentation that accompanied your host’s operating system for instructions on copying firmware images to a disk drive.

   CAUTION: You must quiesce the host load before running HSUTIL or damage to the storage device can occur.

4. Start HSUTIL with the following command:

   ```
   RUN HSUTIL
   ```

HSUTIL displays the following:

```
HSUTIL Main Menu:
 0. Exit
 1. Disk Format
 2. Disk Device Code Load
 3. Tape Device Code Load
 4. Disaster Tolerance Backend Controller Code Load
Enter function number: (0:4) [0]?
```

5. Enter option 2, *Disk Device Code Load*, from the HSUTIL menu.
6. Choose the single-disk unit as the source disk for the download.
7. Enter the starting LBN of the firmware image—usually LBN 0.
8. Enter the product ID of the device you want to upgrade. This ID corresponds to the product information that's reported in the Type column when you issue the SHOW DISK FULL command.

   HSUTIL lists all devices that correspond to the product ID you entered.
9. Enter the disk or tape name of the device you want to upgrade.
10. Confirm or enter the byte count of the firmware image.
11. Confirm the download.
12. Some disk firmware releases require that you reformat the disk after upgrading its firmware. See the documentation that accompanied the firmware to determine if you need to reformat the device.
13. When HSUTIL finishes downloading the firmware, it displays the new firmware revision for the disk drive.

Upgrading to a Dual-Redundant Controller Configuration

Use the following steps to upgrade a single-configuration subsystem to a dual-redundant configuration subsystem. To replace failed components, see Chapter 2, “Replacement Procedures,” for more information. Before you complete this procedure, you’ll need the following items:

- Controller with the same software version and patch level that’s installed on the subsystem’s current single controller
- Cache module with the same memory configuration that’s installed in the current cache module
- ECB storage building block (SBB) for a dual-redundant configuration
- ECB cable

Installing a New Controller, Cache Module, and ECB

Use the following steps to install a new controller, cache module and ECB:

CAUTION: After installing the EMU, check the SCSI ID number on the master enclosure to make sure it represents the correct enclosure number (ID 0). If the SCSI ID number is different from the original enclosure setting, reset the number to ID 0 before starting the controller.

1. Connect a PC or terminal to the controller’s maintenance port. The controller to which you’re connected is “this controller”; the controller that you’re installing is the “other controller.”
2. Start FRUTIL with the following command:

   ```
   RUN FRUTIL
   ```

   FRUTIL displays the following:

   ```
   Do you intend to replace this controller’s cache battery? Y/N
   ```

3. Enter N(o). FRUTIL displays the FRUTIL Main menu:

```
FRUTIL Main Menu:
 1. Replace or remove a controller or cache module
 2. Install a controller or cache module
 3. Replace a PVA module
 4. Replace an I/O module
 5. Exit
Enter choice: 1, 2, 3, 4, or 5 ->
```

4. Enter option 2, *Install a controller or cache module*, from the FRUTIL Main menu. FRUTIL displays the Install Options menu:

```
Install Options:
 1. Other controller and cache module
 2. Other controller module
 3. Other cache module
 4. Exit
Enter choice: 1, 2, 3, or 4 ->
```

5. Enter option 1, *Other controller and cache module*, from the Install Options menu. FRUTIL display the following:

```
Insert the both the slot B controller and cache module? Y/N
```

6. Enter Y(es) and press return. FRUTIL displays the following:

```
Quiescing all device ports.  Please wait...
  Device Port 1 quiesced.
  Device Port 2 quiesced.
  Device Port 3 quiesced.
  Device Port 4 quiesced.
  Device Port 5 quiesced.
  Device Port 6 quiesced.
 All device ports quiesced.
.
.
.
Perform the following steps:
 1. Turn off the battery for the new cache module by pressing
    the battery’s shut off button for five seconds.
 2. Connect the battery to the new cache module.
 3. Insert the new cache module in slot B within 4 minutes.
```

NOTE: A countdown timer allows a total of four minutes to install the controller and cache module. If you exceed four minutes, “this controller” will exit FRUTIL and resume operations. If this happens, return to step 2.

CAUTION: ESD can easily damage a cache module or controller. Wear a snug-fitting, grounded ESD wrist strap.

7. Insert the new ECB SBB into an empty slot.
8. Disable the ECB to which you’re connecting the new cache module by pressing the battery disable switch until the status light stops blinking—about five seconds.

CAUTION: The ECB must be disabled—the status light is not lit and is not blinking—before connecting the ECB cable to the cache module. Failure to disable the ECB could result in the ECB being damaged.

Make sure you align the cache module and controller in the appropriate guide rails. If you do not align the modules correctly, damage to the backplane can occur.

---

9. Connect the ECB cable to the new cache module.
10. Insert the new cache module into its slot and engage its retaining levers. FRUTIL displays the following:

    ```
    Insert the controller module, WITH its program card, in slot A [or B]
    within x minutes, xx seconds.
    ```

11. Ensure that the program card is in the replacement controller and insert the new controller into its slot. Engage its retaining levers. When fully seated, the newly installed controller will boot.

    FRUTIL displays the following:

    ```
    If the other controller did not restart, follow these steps:
      1. Press and hold the other controller’s reset buttons.
      2. Insert the other controller’s program card.
      3. Release the reset button.
    Press return to continue.
    ```

    NOTE: In mirrored mode, FRUTIL will initialize the mirrored portion of the new cache module, check for old data on the cache module, and then restart all device ports. After the device ports have been restarted, FRUTIL will test the cache module and the ECB. After the test completes, the device ports will quiesce and a mirror copy of the cache module data will be created on the newly installed cache module.

12. Connect the host bus cables to the new controller.

    NOTE: One or two host bus cables may be attached, depending on the configuration.

13. Press return to continue. If the other controller did not restart, follow these steps:
    1. Press and hold the other controller’s reset buttons.
    2. Insert the other controller’s program card.
    3. Release the reset button.
14. See the *HSG80 ACS Version 8.x Configuration and CLI Reference Guide* to configure the controller.

    NOTE: If the controller you’ve installed was previously used in another subsystem, it will need to be purged of the controller’s old configuration (see the *HSG80 ACS Version 8.x Configuration and CLI Reference Guide*).

15. Enable failover, and re-establish the dual-redundant controller configuration with the following command:

    ```
    SET FAILOVER COPY=THIS_CONTROLLER
    ```

    This command copies the subsystem’s configuration from “this controller” to the new controller.

16. Disconnect the PC or terminal from the controller’s maintenance port.

Upgrading Cache Memory

The cache module may be configured as shown in Figure 3–4 and Table 3–2.

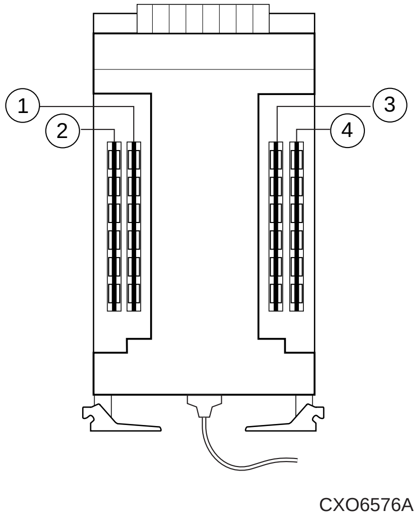

Figure 3–4. Cache-Module Memory Configurations

Table 3–2 Cache Module Memory Configurations

Memory	DIMMs	Quantity	Location
64 MB	**32 MB**	**2**	① ③
128 MB	**32 MB**	**4**	① ② ③ ④
256 MB	**128 MB**	**2**	① ③
512 MB	**128 MB**	**4**	① ② ③ ④

In order to upgrade cache memory, the controller must be shut down. Use the following steps to upgrade or add DIMMs:

1. From the host console, dismount the logical units in the subsystem. If you are using a Windows NT platform, shut down the server.

2. If the controller is operating, connect a PC or terminal to the controller’s maintenance port.
3. Shut down the controllers. In single controller configurations, shut down “this controller.” In dual-redundant controller configurations, shut down the “other controller” first, then shut down “this controller” with the following commands:

```
SHUTDOWN OTHER_CONTROLLER
```

```
SHUTDOWN THIS_CONTROLLER
```

When the controllers shut down, their reset buttons and their first three LEDs are lit continuously. This may take several minutes, depending on the amount of data that needs to be flushed from the cache modules.

△ **CAUTION:** ESD can easily damage a cache module or a DIMM. Wear a snug-fitting, grounded ESD wrist strap.

---

4. Disable the ECB for the cache module in which you will be adding or replacing DIMMS by pressing the battery disable switch until the status light stops blinking—about five seconds.

△ **CAUTION:** The ECB must be disabled—the status light is not lit and is not blinking—before disconnecting the ECB cable from the cache module. Failure to disable the ECB could result in cache module damage.

---

5. Disconnect the ECB cable from the cache module.
6. Disengage the two retaining levers, remove the cache module, and place the cache module onto a grounded antistatic mat.
7. If you are adding DIMMs, insert the new DIMM straight into the socket and ensure that the notches in the DIMM align with the tabs in the socket (see Figure 3–5).

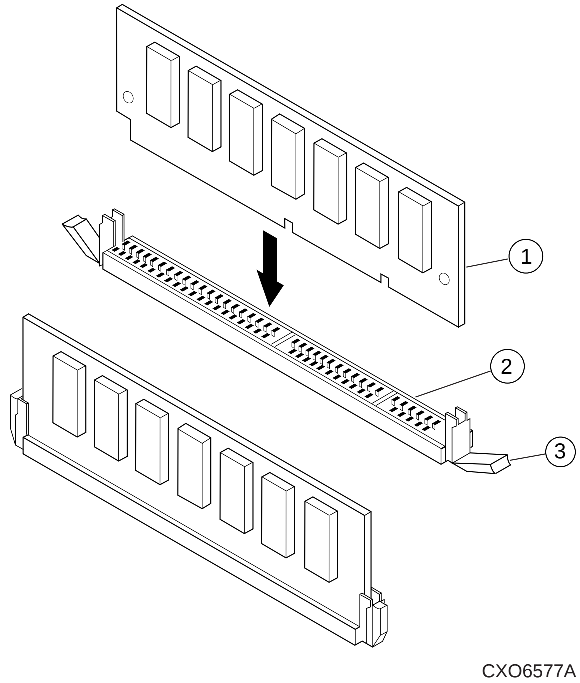

Figure 3–5. DIMM Components

Table 3–3 DIMM Components

Location	Description
①	**DIMM**
②	**DIMM Slot**
③	**DIMM Retaining Clip**

8. If you are replacing DIMMs, press down on the DIMM retaining levers at either end of the DIMM you want to remove.

9. Grasp the DIMM and gently remove it from the DIMM slot.
10. Insert the replacement DIMM straight into the socket and ensure that the notches in the DIMM align with the tabs in the socket (see Figure 3–5).
11. In a dual-redundant controller configuration, repeat steps 4 through 10, as appropriate, for the other cache module.

NOTE: In a dual-redundant controller configuration, both cache modules must contain the same memory configuration.

△ **CAUTION:** Make sure you align the cache module in the appropriate guide rails. If you do not align the module correctly, damage to the backplane can occur.

---

12. Insert the cache module into its slot and engage its retaining levers.
13. Connect the ECB cable to the cache module.
14. In a dual-redundant controller configuration, repeat steps 12 and 13, as appropriate, for the other cache module.
15. Mount the logical units on the host. If you are using a Windows NT platform, restart the server.
16. Set the subsystem date and time. In single controller configurations, set “this controller.” In dual-redundant controller configurations, set “this controller,” then set the “other controller” with the following command:

    SET THIS_CONTROLLER TIME=*dd-mmm-yyyy:hh:mm:ss*

    SET OTHER_CONTROLLER TIME=*dd-mmm-yyyy:hh:mm:ss*

17. Disconnect the PC or terminal from the controller’s maintenance port.

Chapter 4

Troubleshooting

This chapter provides guidelines for troubleshooting the controller, cache module, and external cache battery (ECB). It also describes the utilities and exercisers that you can use to aid in troubleshooting these components. See Chapter 5, “Event Reporting: Templates and Codes,” for a list of event codes. See the documentation that accompanied the enclosure for information on troubleshooting its hardware, such as the power supplies, cooling fans, and environmental monitoring unit (EMU).

Running the Controller’s Diagnostic Test

During start up, the controller automatically tests its device ports, host port, cache module, and value-added functions. If you’re experiencing intermittent problems with one of these components, you can run the controller’s diagnostic test in a continuous loop, rather than restarting the controller over and over again.

Use the following steps to run the controller’s diagnostic test:

1. Connect a terminal to the controller’s maintenance port.
2. Start the self test with one of the following commands:

```
SELFTEST THIS CONTROLLER
```

```
SELFTEST OTHER_CONTROLLER
```

NOTE: The self test runs until it detects an error or until you press the controller’s reset button.

If the self test detects an error, it saves information about the error and produces an OCP LED code for a “daemon hard error.” Restart the controller to write the error information to the host’s error log, then check the log for a “built-in self-test failure” event report. This report will contain an instance code, located at offset 32 through 35, that you can use to determine the cause of the error. See “Translating Event Codes,” page 4-40 for help on translating instance codes.

Charging Diagnostics

Whenever you restart the controller, its diagnostic routines automatically check the charge in the ECB’s batteries. If the batteries are fully charged, the controller reports them as good and rechecks them every 24 hours. If the batteries are charging, the controller rechecks them every four minutes. Batteries are reported as being either above or below 50 percent in capacity. Batteries below 50 percent in capacity are referred to as being low.

This four-minute polling continues for up to 10 hours—the maximum time it should take to recharge the batteries. If the batteries have not been charged sufficiently after 10 hours, the controller declares them to be failed.

Battery Hysteresis

When charging a battery, write-back caching will be allowed as long as a previous down time has not drained more than 50 percent of a battery's capacity. When a battery is operating below 50 percent capacity, the battery is considered to be low and write-back caching is disabled.

CAUTION: Compaq recommends that you replace the ECB every two years to prevent battery failure.

NOTE: If a UPS is used for backup power, the controller does not check the battery. See the *HSG80 ACS Version 8.x Configuration and CLI Reference Guide* for information about the CACHE_UPS and NOCACHE_UPS switches.

Troubleshooting Checklist

The following checklist provides a general procedure for diagnosing the controller and its supporting modules. If you follow this checklist, you'll be able to identify many of the problems that occur in a typical installation. When you've identified the problem, use Table 4–1 to confirm your diagnosis and fix the problem.

If your initial diagnosis points to several possible causes, use the tools described later in this chapter to further refine your diagnosis. If the problem can't be diagnosed using the checklist and tools, call customer service for additional support.

To troubleshoot the controller and its supporting modules:

1. Check the power to the cabinet and its components. Are the cords properly connected? Is the power within specifications?
2. Check the component cables. Are the bus cables to the controllers connected properly? Are the ECB cables properly connected?
3. Check the program cards to ensure they're fully seated.
4. Check the operator control panel and devices for LED codes. See "Flashing OCP Pattern Display Reporting," page 4–26, and "Solid OCP Pattern Display Reporting," page 4–28, to interpret the LED codes.
5. Connect a local terminal to the controller and check its configuration with the following command:

   ```
   SHOW THIS_CONTROLLER FULL
   ```

   Ensure that the ACS version is correct and that pertinent patches have been installed. Also, check the status of the cache module and its ECB.

   In a dual redundant configuration, check the other controller with the following command:

   ```
   SHOW OTHER_CONTROLLER FULL
   ```

6. Using FMU, check for last failure or memory-system failure entries. Show these codes and translate the last failure codes they contain. "Significant Event Reporting," page 4-25.

If the controller has failed to the extent that it cannot support a local terminal for FMU, check the host's error log for the instance or last-failure codes. See Chapter 5, "Event Reporting: Templates and Codes," to interpret the event codes.

7. Check the status of the devices with the following command:

   ```
   SHOW DEVICES FULL
   ```

   Look for errors such as "misconfigured device" or "No device at this PTL." If a device reports misconfigured or missing, check its status with the following command:

   ```
   SHOW device-name
   ```

8. Check the status of the storagesets with the following command:

   ```
   SHOW STORAGESETS FULL
   ```

   Ensure that all storagesets are normal (or normalizing if it's a RAIDset or mirrorset). Check again for misconfigured or missing devices.

9. Check the status of the units with the following command:

   ```
   SHOW UNITS FULL
   ```

   Ensure that all of the units are available or online. If the controller reports that a unit is unavailable or offline, recheck the storageset it belongs to with the following command:

   ```
   SHOW storageset-name
   ```

   If the controller reports that a unit has lost data or is unwriteable, recheck the status of the devices that make up the storageset. If the devices are OK, recheck the status of the cache module. If the unit reports a media format error, recheck the status of the storageset and its devices.

Troubleshooting Table

Use the troubleshooting checklist that begins on page 4–4 to find a symptom, then use Table 4–1 to verify and fix the problem.

Table 4–1 Troubleshooting Table

Symptom	Possible Cause	Investigation	Remedy
Reset button not lit	No power to subsystem.	Check power to subsystem and power supplies on controller's shelf.	Replace cord or AC input power module.
		Ensure that all cooling fans are installed. If one or more fans are missing or all are inoperative for more than eight minutes, the EMU shuts down the subsystem.	Turn off power switch on AC input power module. Replace cooling fan. Restore power to subsystem.
		Verify that the standby power switch on the PVA was not depressed for more than five seconds.	Depress the alarm control switch on the EMU.
	Failed controller.	If the foregoing check fails to produce a remedy, check for OCP LED codes.	Replace controller.
Reset button lit steadily; other LEDs also lit.	Various	See Operator Control Panel LED Codes.	Follow repair action.

Table 4–1 Troubleshooting Table (Continued)

Symptom	Possible Cause	Investigation	Remedy
Reset button blinking; other LEDs also lit.	Device in error or FAIL set on corresponding device port with other LEDs lit.	SHOW *device* FULL	Follow repair action.
Cannot set failover to create dual-redundant configuration.	Incorrect command syntax.	See the *HSG80 ACS Version 8.x Configuration and CLI Reference Guide* for the SET FAILOVER command.	Use the correct command syntax.
	Different software versions on controllers.	Check software versions on both controllers.	Update one or both controllers so that both controllers are using the same software version.
	Incompatible hardware.	Check hardware versions.	Upgrade controllers so that they're using compatible hardware.

Table 4–1 Troubleshooting Table (Continued)

Symptom	Possible Cause	Investigation	Remedy
	Controller previously set for failover.	Ensure that neither controller is configured for failover.	Use the SET NOFAILOVER command on both controllers, then reset “this controller” for failover.
	Failed controller.	If the foregoing checks fail to produce a remedy, check for OCP LED codes.	Follow repair action.
	Node ID is all zeros.	SHOW_THIS to see if node ID is all zeros.	Set node ID using the node ID (bar code) that is located on the frame in which the controller sits. See SET THIS CONTROLLER NODE_ ID in *HSG80 ACS Version 8.x Configuration and CLI Reference Guide.* Also, be sure that you are copying in the right direction. If you are cabled to the new controller, use SET FAILOVER COPY=OTHER. If cabled to old controller, use SET FAILOVER COPY=THIS.

Table 4–1 Troubleshooting Table (Continued)

Symptom	Possible Cause	Investigation	Remedy
Nonmirrored cache; controller reports failed DIMM in cache module A or B.	Improperly installed DIMM.	Remove cache module and ensure that DIMM is fully seated in its slot.	Reseat DIMM.
	Failed DIMM.	If the foregoing check fails to produce a remedy, check for OCP LED codes.	Replace DIMM.
Mirrored cache; “this controller” reports DIMM 1 or 2 failed in cache module A or B.	Improperly installed DIMM in “this controller’s” cache module.	Remove cache module and ensure that DIMMs are installed properly.	Reseat DIMM.
	Failed DIMM in “this controller’s” cache module.	If the foregoing check fails to produce a remedy, check for OCP LED codes.	Replace DIMM in “this controller’s” cache module.
Mirrored cache; “this controller” reports DIMM 3 or 4 failed in cache module A or B.	Improperly installed DIMM in “other controller’s” cache module.	Remove cache module and ensure that DIMMs are installed properly.	Reseat DIMM.
	Failed DIMM in “other controller’s” cache module.	If the foregoing check fails to produce a remedy, check for OCP LED codes.	Replace DIMM in “other controller’s” cache module.
Mirrored cache; controller reports battery not present.	Memory module was installed before it was connected to an ECB.	ECB cable not connected to cache module.	Connect ECB cable to cache module, then restart both controllers by pushing their reset buttons simultaneously.

Table 4–1 Troubleshooting Table (Continued)

Symptom	Possible Cause	Investigation	Remedy
Mirrored cache; controller reports cache or mirrored cache has failed.	Primary data and its mirrored copy data are not identical.	SHOW THIS_CONTROLLER indicates that the cache or mirrored cache has failed. Spontaneous FMU message displays: “Primary cache declared failed - data inconsistent with mirror,” or “Mirrored cache declared failed - data inconsistent with primary.”	Enter the SHUTDOWN command on controllers that report the problem. (This command flushes the contents of cache to synchronize its primary and mirrored data.) Restart the controllers that you shut down.

Table 4–1 Troubleshooting Table (Continued)

Symptom	Possible Cause	Investigation	Remedy
Invalid cache	Mirrored-cache mode discrepancy. This may occur after you've installed a new controller. Its existing cache module is set for mirrored caching, but the new controller is set for unmirrored caching. (It may also occur if the new controller is set for mirrored caching but its existing cache module is not.)	SHOW THIS CONTROLLER indicates "invalid cache." Spontaneous FMU message displays: "Cache modules inconsistent with mirror mode."	Connect a terminal to the maintenance port on the controller reporting the error and clear the error with the following command—all on one line: CLEAR_ERRORS THIS_CONTROLLER NODESTROY INVALID_CACHE.

Table 4–1 Troubleshooting Table (Continued)

Symptom	Possible Cause	Investigation	Remedy
	Cache module may erroneously contain unflushed write-back data. This may occur after you've installed a new controller. Its existing cache module may indicate that it contains unflushed write-back data, but the new controller expects to find no data in the existing cache module. (This error may also occur if you install a new cache module for a controller that expects write-back data in the cache.)	SHOW THIS CONTROLLER indicates "invalid cache." No spontaneous FMU message.	Connect a terminal to the maintenance port on the controller reporting the error, and clear the error with the following command—all on one line: CLEAR_ERRORS THIS_CONTROLLER DESTROY INVALID_CACHE. See *HSG80 ACS Version 8.x Configuration and CLI Reference Guide* for more information.

Table 4–1 Troubleshooting Table (Continued)

Symptom	Possible Cause	Investigation	Remedy
Cannot add device	Illegal device.	See product-specific release notes that accompanied the software release for the most recent list of supported devices.	Replace device.
	Device not properly installed in shelf.	Check that SBB is fully seated.	Firmly press SBB into slot.
	Failed device.	Check for presence of device LEDs.	Follow repair action in the documentation provided with the enclosure or device.
	Failed power supplies.	Check for presence of power supply LEDs.	Follow repair action in the documentation provided with the enclosure or power supply.
	Failed bus to device.	If the foregoing checks fail to produce a remedy, check for OCP LED codes.	Replace enclosure or shelf.

Table 4–1 Troubleshooting Table (Continued)

Symptom	Possible Cause	Investigation	Remedy
Cannot configure storagesets	Incorrect command syntax.	See *HSG80 ACS Version 8.x Configuration and CLI Reference Guide* for the ADD *storageset* command.	Reconfigure storageset with correct command syntax.
	Exceeded maximum number of storagesets.	Use the SHOW command to count the number of storagesets configured on the controller.	Delete unused storagesets.
	Failed battery on ECB. (An ECB or UPS is required for RAIDsets and mirrorsets.)	Use the SHOW command to check the ECB's battery status.	Replace the ECB if required.
Can't assign unit number to storageset.	Incorrect command syntax.	See the *HSG80 ACS Version 8.x Configuration and CLI Reference Guide* for correct syntax.	Reassign the unit number with the correct syntax.
	Incorrect SCSI target ID numbers set for controller that accesses desired unit. (First number of unit number must be one of the SCSI target ID numbers for the controller.)	Use the SHOW command to check the controller's SCSI target ID numbers.	Reset the controller's SCSI target ID numbers or assign a new unit number as desired.

Table 4–1 Troubleshooting Table (Continued)

Symptom	Possible Cause	Investigation	Remedy
Unit is available but not online	This is normal. Units are “available” until the host accesses them, at which point their status is changed to “online.”	None	None
Host cannot see device	Broken cables or a missing, incorrect, or defective terminator.	Check for broken cables or a missing, incorrect, or defective terminator.	Replace broken cables or the missing, incorrect, or defective terminator.

Table 4–1 Troubleshooting Table (Continued)

Symptom	Possible Cause	Investigation	Remedy
Host cannot access unit	Host files or device drivers not properly installed or configured.	Check for the required device special files.	Configure device special files as described in the getting started manual that accompanied your software release.
	Invalid Cache	See the description for the invalid cache symptom.	See the description for the invalid cache symptom.
	Unit(s) have lost data.	Issue the SHOW_UNIT command.	CLEAR_ERRORS *unit* lost data.

Table 4–1 Troubleshooting Table (Continued)

Symptom	Possible Cause	Investigation	Remedy
Host's log file or maintenance terminal indicates that a forced error occurred when the controller was reconstructing a RAIDset or mirrorset	Unrecoverable read errors may have occurred when controller was reconstructing the storageset. Errors occur if another member fails while the controller is reconstructing the storageset.	Conduct a read scan of the storageset using the appropriate utility from the host's operating system, such as the "dd" utility for a Tru64 UNIX (formerly DIGITAL UNIX) host.	Rebuild the storageset, then restore its data from a backup source. While the controller is reconstructing the storageset, monitor the host error log activity or spontaneous event reports on the maintenance terminal for any unrecoverable errors. If unrecoverable errors persist, note the device on which they occurred, and replace the device before proceeding.
	Host requested data from a normalizing storageset that didn't contain the data.	Use the SHOW *storageset-name* to see if all of its members are "normal."	Wait for normalizing members to become normal, then resume I/O to them.

Fault-Tolerance for Write-Back Caching

The cache module supports nonvolatile memory and dynamic cache policies to protect the availability of its unwritten (write-back) data.

Nonvolatile Memory

Except for disaster-tolerant supported mirrorsets, the controller can provide write-back caching for storage units as long as the controller's cache memory is nonvolatile. In other words, to enable write-back caching, you must provide a backup power source to the cache module to preserve the unwritten cache data in the event of a power failure. If the cache memory were volatile—that is, if it didn't have a backup power supply—the unwritten cache data would be lost during a power failure.

By default, the controller expects to use an ECB as the backup power source for its cache module. However, if your subsystem is backed up by an uninterruptable power supply (UPS), you can tell the controller to use the UPS as the backup power source with the command, SET Controller, and using the CACHE_UPS switch.

Cache Policies Resulting from Cache Module Failures

If the controller detects a full or partial failure of its cache module or ECB, it automatically reacts to preserve the unwritten data in its cache module. Depending upon the severity of the failure, the controller chooses an interim caching technique—also called the cache policy—which it uses until you repair or replace the cache module.

Table 4–2 shows the cache policies resulting from a full or partial failure of cache module A in a dual-redundant controller configuration. The consequences shown in this table are the same for cache module B.

Table 4–3 shows the cache policies resulting from a full or partial failure of cache module A's ECB in a dual-redundant controller configuration. When cache module A is at least 50% charged, the ECB is still good and is charging. When it is less than 50% charged, the ECB is low, but still charging. The consequences shown are the opposite for a failure of cache module B's ECB.

Table 4–2 Cache Policies and Cache Module Status

Cache Module Status		Cache Policy	
Cache A	Cache B	Unmirrored Cache	Mirrored Cache
Good	Good	Data loss: No. Cache policy: Both controllers support write-back caching. Failover: No.	Data loss: No. Cache policy: Both controllers support write-back caching. Failover: No.
Multibit cache memory failure	Good	Data loss: Forced error and loss of write-back data for which the multibit error occurred. Controller A detects and reports the lost blocks. Cache policy: Both controllers support write-back caching. Failover: No.	Data loss: No. Controller A recovers its lost write-back data from the mirrored copy on cache B. Cache policy: Both controllers support write-back caching. Failover: No.

Table 4–2 Cache Policies and Cache Module Status (Continued)

Cache Module Status		Cache Policy	
Cache A	Cache B	Unmirrored Cache	Mirrored Cache
DIMM or cache memory controller chip failure	Good	Data integrity: Write-back data that was not written to media when failure occurred was not recovered. Cache policy: Controller A supports write-through caching only; controller B supports write-back caching. Failover: In transparent failover, all units failover to controller B. In multiple-bus failover with host-assist, only those units that use write-back caching, such as RAIDsets and mirrorsets, failover to controller B. All units with lost data become inoperative until you clear them with the CLEAR LOST_DATA command. Units that didn't lose data operate normally on controller B. In single controller configurations, RAIDsets, mirrorsets, and all units with lost data become inoperative. Although you can clear the lost data errors on some units, RAIDsets and mirrorsets remain inoperative until you repair or replace the nonvolatile memory on cache A.	Data integrity: Controller A recovers all of its write-back data from the mirrored copy on cache B. Cache policy: Controller A supports write-through caching only; controller B supports write-back caching. Failover: In transparent failover, all units failover to controller B and operate normally. In multiple-bus failover with host-assist, only those units that use write-back caching, such as RAIDsets and mirrorsets, failover to controller B.

Table 4–2 Cache Policies and Cache Module Status (Continued)

Cache Module Status		Cache Policy	
Cache A	Cache B	Unmirrored Cache	Mirrored Cache
Cache Board Failure	Good	Same as for DIMM failure.	Data integrity: Controller A recovers all of its write-back data from the mirrored copy on cache B. Cache policy: Both controllers support write-through caching only. Controller B cannot execute mirrored writes because cache module A cannot mirror controller B's unwritten data. Failover: No.

Table 4–3 Resulting Cache Policies and ECB Status

Cache Module Status		Cache Policy	
Cache A	Cache B	Unmirrored Cache	Mirrored Cache
At least 50% charged	At least 50% charged	Data loss: No. Cache policy: Both controllers continue to support write-back caching. Failover: No.	Data loss: No. Cache policy: Both controllers continue to support write-back caching. Failover: No.

Table 4–3 Resulting Cache Policies and ECB Status (Continued)

Cache Module Status		Cache Policy	
Cache A	**Cache B**	**Unmirrored Cache**	**Mirrored Cache**
Less than 50% charged	At least 50% charged	Data loss: No. Cache policy: Controller A supports write-through caching only; controller B supports write-back caching. Failover: In transparent failover, all units failover to controller B. In multiple-bus failover with host-assist, only those units that use write-back caching, such as RAIDsets and mirrorsets, failover to controller B. In single-controller configurations, the controller only provides write-through caching to its units.	Data loss: No. Cache policy: Both controllers continue to support write-back caching. Failover: No.

Table 4–3 Resulting Cache Policies and ECB Status (Continued)

Cache Module Status		Cache Policy	
Cache A	**Cache B**	**Unmirrored Cache**	**Mirrored Cache**
Failed	At least 50% charged	Data loss: No. Cache policy: Controller A supports write-through caching only; controller B supports write-back caching. Failover: In transparent failover, all units failover to controller B and operate normally. In multiple-bus failover with host-assist, only those units that use write-back caching, such as RAIDsets and mirrorsets, failover to controller B. In single-controller configurations, the controller only provides write-through caching to its units.	Data loss: No. Cache policy: Both controllers continue to support write-back caching. Failover: No.
Less than 50% charged	Less than 50% charged	Data loss: No. Cache policy: Both controllers support write-through caching only. Failover: No.	Data loss: No. Cache policy: Both controllers support write-through caching only. Failover: No.

Table 4–3 Resulting Cache Policies and ECB Status (Continued)

Cache Module Status		Cache Policy	
Cache A	Cache B	Unmirrored Cache	Mirrored Cache
Failed	Less than 50% charged	Data loss: No. Cache policy: Both controllers support write-through caching only. Failover: In transparent failover, all units failover to controller B and operate normally. In multiple-bus failover with host-assist, only those units that use write-back caching, such as RAIDsets and mirrorsets, failover to controller B. In single-controller configurations, the controller only provides write-through caching to its units.	Data loss: No. Cache policy: Both controllers support write-through caching only. Failover: No.
Failed	Failed	Data loss: No. Cache policy: Both controllers support write-through caching only. Failover: No. RAIDsets and mirrorsets become inoperative. Other units that use write-back caching operate with write-through caching only.	Data loss: No. Cache policy: Both controllers support write-through caching only. Failover: No. RAIDsets and mirrorsets become inoperative. Other units that use write-back caching operate with write-through caching only.

Significant Event Reporting

The controller’s fault-management software reports information about significant events that occur. These events are reported via the:

- Maintenance terminal
- Host error log
- Operator control panel (OCP)

Some events cause controller operation to terminate; others allow the controller to remain operable. Each of these two instances are detailed in the following sections.

Events that cause controller termination

When an event causes the controller to terminate, there are three possible ways in which it is reported:

- Flashing OCP Pattern Display
- Solid OCP Pattern Display
- Last Failure

Use Table 4–4 to interpret flashing OCP patterns and Table 4–5 to interpret solid OCP patterns. In the ERROR column of the solid OCP patterns, there are two separate descriptions. The first denotes the actual error message that appears on your terminal, and the second provides a more detailed explanation of the designated error. Use this legend for both tables:

■ = reset button on
❏ = reset button off
● = LED on
❍ = LED off

NOTE: If the reset button is flashing and an LED is lit continuously, either the devices on that LED's bus don't match the controller's configuration, or an error has occurred in one of the devices on that bus. Also, a single LED that is lit indicates a failure of the drive on that port.

Flashing OCP Pattern Display Reporting

Certain events can cause an alternating display of the OCP LEDs. These patterns are described in Table 4–4.

Table 4–4 Flashing OCP Patterns

Pattern	OCP Code	Error	Repair Action
■❍❍❍❍❍●	1	Program card EDC error	Replace program card
■❍❍❍●❍❍	4	Timer zero on the processor is bad	Replace controller
■❍❍❍●❍●	5	Timer one on the processor is bad	Replace controller
■❍❍❍●●❍	6	Processor Guarded Memory Unit (GMU) is bad	Replace controller
■❍❍●❍●●	B	Nonvolatile Journal Memory (JSRAM) structure is bad because of a memory error or an incorrect upgrade procedure	Verify the correct upgrade (see the ***HSG80 Array Controller ACS Version 8.X Release Notes***). If error continues, replace controller
■❍❍●●❍●	D	One or more bits in the diagnostic registers did not match the expected reset value	Press the reset button to restart the controller. If this does not correct the error, replace the controller
■❍❍●●●❍	E	Memory error in the JSRAM	Replace controller
■❍❍●●●●	F	Wrong image found on program card	Replace program card or replace controller if needed
■❍●❍❍❍❍	10	Controller Module memory is bad	Replace controller
■❍●❍❍●❍	12	Controller Module memory addressing is malfunctioning	Replace controller

Table 4–4 Flashing OCP Patterns (Continued)

Pattern	OCP Code	Error	Repair Action
■❍●❍❍●●	13	Controller Module memory parity is not working	Replace controller
■❍●❍●❍❍	14	Controller Module memory controller timer has failed	Replace controller
■❍●●❍❍●	15	The Controller Module memory controller interrupt handler has failed	Replace controller
■❍●●●●❍	1E	During the diagnostic memory test, the Controller Module memory controller caused an unexpected Non-Maskable Interrupt (NMI)	Replace controller
■●❍❍●❍❍	24	The card's code image changed when the contents were copied to memory	Replace controller
■●●❍❍❍❍	30	The JSRAM battery is bad	Replace controller
■●●❍❍●❍	32	First-half diagnostics of the Time of Year Clock failed	Replace controller
■●●❍❍●●	33	Second-half diagnostics of the Time of Year Clock failed	Replace controller
■●●❍●❍●	35	The processor bus-to-device bus bridge chip is bad	Replace controller
■●●●❍●●	3B	There is an unnecessary interrupt pending	Replace controller
■●●●●❍❍	3C	There was an unexpected fault during initialization	Replace controller

Table 4–4 Flashing OCP Patterns (Continued)

Pattern	OCP Code	Error	Repair Action
■●●●●○●	3D	There was an unexpected maskable interrupt during initialization	Replace controller
■●●●●●○	3E	There was an unexpected NMI during initialization	Replace controller
■●●●●●●	3F	An invalid process ran during initialization	Replace controller

Solid OCP Pattern Display Reporting

Some events cause a steady pattern to be displayed in the OCP LEDs, as described in Table 4–5.

Table 4–5 Solid OCP Patterns

Pattern	OCP Code	Error	Repair Action
■●●●●●●	3F	DAEMON diagnostic failed hard in non-fault tolerant mode DAEMON diagnostic detected critical hardware component failure; controller can no longer operate	Verify that cache module is present. If the error persists, replace controller
■●●●●○●	3D	NVPM structure revision greater than image’s NVPM structure revision number is greater than the one that can be handled by the software version attempting to be executed	Replace program card with one that contains the latest software version

Table 4–5 Solid OCP Patterns (Continued)

Pattern	OCP Code	Error	Repair Action
■●●●●❍❍	3C	NVPM write loop hang Attempt to write data to NVPM failed	Replace controller
■●●●❍●●	3B	NVPM read loop hang Attempt to read data from NVPM failed	Replace controller
■●●●❍●❍	3A	An unexpected NMI occurred during Last Failure processing Last Failure processing interrupted by a Non-Maskable Interrupt (NMI)	Replace controller
■●●●❍❍●	39	NVPM configuration inconsistent Device configuration within the NVPM is inconsistent	Replace controller
■●●●❍❍❍	38	Controller operation terminated Last Failure event required termination of controller operation (e.g. SHUT DOWN VIA CLI)	Reset controller
■●●❍●●●	37	Software-induced controller reset expected Software-induced reset failed	Replace controller
■●●❍●●❍	36	Hardware-induced controller reset expected Automatic hardware reset failed	Replace controller

Table 4–5 Solid OCP Patterns (Continued)

Pattern	OCP Code	Error	Repair Action
■●●❍●❍●	35	An unexpected bugcheck occurred during Last Failure processing Last Failure Processing interrupted by another Last Failure event	Reset controller
■●●❍❍●●	33	NVPM structure revision too low NVPM structure revision number is less than the one that can be handled by the software version attempting to be executed	Verify that the program card contains the latest software version. If the error persists, replace controller
■●●❍❍●❍	32	Code load program card write failure Attempt to update program card failed	Replace card
■●●❍❍❍●	31	ILF$INIT unable to allocate memory Attempt to allocate memory by ILF$INIT failed	Replace controller
■●●❍❍❍❍	30	An unexpected bugcheck occurred before subsystem initialization completed An unexpected Last Failure occurred during initialization	Reinsert controller. If that does not correct the problem, reset the controller. If the error persists, try resetting the controller again, and replace it if no change occurs
■●❍●●●●	2F	Memory module has illegal DIMM configuration	Verify that DIMMs are installed correctly

Table 4–5 Solid OCP Patterns (Continued)

Pattern	OCP Code	Error	Repair Action
■●○●●●○	2E	Multiple cabinets have the same SCSI ID More than one cabinet have the same SCSI ID	Reconfigure PVA ID to uniquely-identify each cabinet in the subsystem. The cabinet with the controllers must be set to PVA ID 0; additional cabinets must use PVA IDs 2 and 3. If error continues after PVA settings are unique, replace each PVA module one at a time. Check cabinet if problem remains
■●○●●○●	2D	All master cabinet SCSI buses are not set to ID 0	Set PVA ID to 0 for the cabinet with the controllers. If problem persists, try the following repair actions: 1. Replace the PVA module 2. Replace the EMU 3. Remove all devices 4. Replace the cabinet
■●○●●○○	2C	Cabinet IO termination power out of range Faulty or missing IO module causes cabinet IO termination power to be out of range	Ensure that all of the cabinet's device SCSI buses have an I/O module. If problem persists, replace the failed I/O module.
■●○●○●●	2B	Jumpers not terminators found on backplane One or more SCSI bus terminators are either missing from the backplane or broken	Ensure that cabinet's SCSI bus terminators are installed and that there are no jumpers. Replace the failed terminator if the problem continues.

Table 4–5 Solid OCP Patterns (Continued)

Pattern	OCP Code	Error	Repair Action
■●❍●❍●❍	2A	All cabinet IO modules are not of the same type Cabinet I/O modules are a combination of single-sided and differential	Ensure that the I/O modules in an extended subsystem are either all single-ended or all differential, not both.
■●❍●❍❍●	29	EMU protocol version incompatible The microcode in the EMU and the software in the controller are not compatible	Upgrade either the EMU microcode or the software (refer to the Release Notes that accompanied the controller's software).
■●❍●❍❍❍	28	An unexpected Machine Fault/NMI occurred during Last Failure processing A machine fault was detected while a Non-Maskable Interrupt was processing	Reset the controller
■●❍❍●●●	27	Memory module has insufficient usable memory	Replace indicated DIMM(s) (This indication is only provided when Fault LED logging is enabled).
■●❍❍●●❍	26	Indicated memory module is missing Controller is unable to detect a particular memory module	Insert memory module (cache board)
■●❍❍●❍●	25	Recursive Bugcheck detected The same bugcheck has occurred three times within ten minutes, and controller operation has terminated.	Reset the controller. If this fault pattern is displayed repeatedly, follow the repair action(s) associated with the Last Failure code that is repeatedly terminating controller execution.

Table 4–5 Solid OCP Patterns (Continued)

Pattern	OCP Code	Error	Repair Action
■❍❍❍❍❍❍	0	No program card detected or kill asserted by other controller Controller unable to read program card	Ensure that program card is properly seated while resetting the controller. If the error persists, try the card with another controller; or replace the card. Otherwise, replace the controller that reported the error.
❑❍❍❍❍❍❍	0	Catastrophic controller or power failure	Check power. If good, reset controller. If problem persists, reseat controller module and reset controller. If problem is still evident, replace controller module.

In addition, information related to the solid OCP patterns may be displayed on the maintenance terminal using %FLL formatting, as detailed in the following examples:

```
%FLL--HSG> --13-JAN-1946 04:39:45 (time not set)-- OCP Code: 38
Controller operation terminated.

%FLL--HSG> --13-JAN-1946 04:32:26 (time not set)-- OCP Code: 26
Memory module is missing.
```

Last Failure Reporting

Last Failures are displayed on the maintenance terminal using %LFL formatting. The example below details an occurrence of a Last Failure report:

```
%LFL--HSG> --13-JAN-1946 04:39:45 (time not set)-- Last Failure Code: 20090010
Power On Time: 0.Years, 14.Days, 19.Hours, 58.Minutes, 42.Seconds
Controller Model: HSG80
Serial Number: AA12345678 Hardware Version: 0000(00)
Software Version: V084F(50)
Informational Report
Instance Code: 0102030A
Last Failure Code: 20090010 (No Last Failure Parameters)

Additional information is available in Last Failure Entry: 1.
```

In addition, Last Failures are reported to the host error log using Template 01, following a reboot of the controller. See Figure 5–2, “Template 01—Last Failure Event Sense Data Response Format,” for a more detailed explanation.

Events that do not cause controller operation to terminate

Events that do not cause controller operation to terminate are displayed in one of two ways:

- Spontaneous Event Log
- CLI Event Reporting

Spontaneous Event Log

Spontaneous event logs are displayed on the maintenance terminal using %EVL formatting, as illustrated in the following examples:

```
%EVL--HSG> --13-JAN-1946 04:32:47 (time not set)-- Instance Code: 0102030A (not
yet reported to host)
Template: 1.(01)
Power On Time: 0.Years, 14.Days, 19.Hours, 58.Minutes, 43.Seconds
Controller Model: HSG80
Serial Number: AA12345678 Hardware Version: 0000(00)
Software Version: V084F(50)
Informational Report
Instance Code: 0102030A
Last Failure Code: 011C0011
Last Failure Parameter[0.] 0000003F

%EVL--HSG> --13-JAN-1946 04:32:47 (time not set)-- Instance Code: 82042002 (not
yet reported to host)
Template: 19.(13)
Power On Time: 0.Years, 14.Days, 19.Hours, 58.Minutes, 43.Seconds
Controller Model: HSG80
Serial Number: AA12345678 Hardware Version: 0000(00)
Software Version: V084F(50)
Header type: 00 Header flags: 00
Test entity number: 0F Test number Demand/Failure: F8 Command: 01
Error Code: 0008 Return Code: 0005 Address of Error: A0000000
Expected Error Data: 44FCFCFC Actual Error Data: FFFF01BB
Extra Status(1): 00000000 Extra Status(2): 00000000 Extra Status(3): 00000000
Instance Code: 82042002
HSG>
```

Spontaneous event logs are reported to the host error log using SCSI Sense Data Templates 01, 04, 05, 11, 12, 13, 14, 41, and 51. See Chapter 5, “Event Reporting: Templates and Codes,” for a more detailed explanation.

CLI Event Reporting

CLI event reports are displayed on the maintenance terminal using %CER formatting, as shown in the following example:

```
%CER--HSG> --13-JAN-1946 04:32:20 (time not set)-- Previous controller-
operation terminated with display of solid fault code, OCP Code: 3F
HSG>
```

Utilities and Exercisers

The controller’s software includes the utilities and exercisers to assist in troubleshooting and maintaining the controller and the other modules that support its operation.

Fault Management Utility

The Fault Management Utility (FMU) provides a limited interface to the controller’s fault-management software. Use FMU to:

- Display the last-failure and memory-system-failure entries that the fault-management software stores in the controller’s non-volatile memory.
- Translate many of the code values contained in event messages. For example, entries may contain code values that indicate the cause of the event, the software component that reported the event, the repair action, and so on.
- Control the display characteristics of significant events and failures that the fault-management system displays on the maintenance terminal. See “Controlling the Display of Significant Events and Failures,” page 4-41, for specific details on this feature.

Displaying Failure Entries

The controller stores the 16 most recent last-failure reports as entries in its non-volatile memory. The occurrence of any failure event will terminate operation of the controller on which it occurred.

> **NOTE:** Memory system failures are reported via the last failure mechanism but can be displayed separately.

Use the following steps to display the last-failure entries:

1. Connect a PC or a local terminal to the controller.
2. Start FMU with the following command:

   ```
   RUN FMU
   ```

3. Show one or more of the entries with the following command:

   ```
   SHOW event_type entry# FULL
   ```

   where:

- *event-type* is LAST_FAILURE or MEMORY_SYSTEM_FAILURE
- *entry#* is ALL, MOST_RECENT, or 1 through 16
- *FULL* displays additional information, such as the I960 stack and hardware component register sets (for example, the memory controller, FX, host port, and device ports, and so on).

4. Exit FMU with the following command:

   ```
   EXIT
   ```

The following example shows a last-failure entry. The Informational Report—the lower half of the entry—contains the instance code, reporting component, and so forth that you can translate with FMU to learn more about the event.

```
Last Failure Entry: 4. Flags: 006FF300
Template: 1.(01) Description: Last Failure Event
Power On Time: 0. Years, 14. Days, 19. Hours, 51. Minutes, 31. Seconds
Controller Model: HSG80
Serial Number: AA12345678 Hardware Version: 0000(00)
Software Version: V084F(50)
Informational Report
Instance Code: 0102030A Description:
An unrecoverable software inconsistency was detected or an intentional
restart or shutdown of controller operation was requested.
Reporting Component: 1.(01) Description:
Executive Services
Reporting component's event number: 2.(02)
Event Threshold: 10.(0A) Classification:
SOFT. An unexpected condition detected by a controller software component
(e.g., protocol violations, host buffer access errors, internal
inconsistencies, uninterpreted device errors, etc.) or an intentional
restart or shutdown of controller operation is indicated.
Last Failure Code: 20090010 (No Last Failure Parameters)
Last Failure Code: 20090010 Description:
This controller requested this controller to shutdown.
Reporting Component: 32.(20) Description:
Command Line Interpreter
Reporting component's event number: 9.(09)
Restart Type: 1.(01) Description: No restart
```

Translating Event Codes

Use the following steps to translate the event codes in the fault-management reports for spontaneous events and failures:

1. Connect a PC or a local terminal to the controller's maintenance port.
2. Start FMU with the following command:

   ```
   RUN FMU
   ```

3. Show one or more of the entries with the following command:

   DESCRIBE *code_type code#*

   where *code_type* is one of those listed in Table 4–6 and *code#* is the alphanumeric value displayed in the entry. The code types marked with an asterisk (*) require multiple code numbers.

Table 4–6 Event-Code Types

Event-Code Type	Event-Code Type
ASC_ASCQ_CODE*	REPAIR_ACTION_CODE
COMPONENT_CODE	RESTART_TYPE
CONTROLLER_UNIQUE_ASC_ASCQ_CODE*	SCSI_COMMAND_OPERATION_CODE*
DEVICE_TYPE_CODE	SENSE_DATA_QUALIFIERS*
EVENT _THRESHOLD_CODE	SENSE_KEY_CODE
INSTANCE_CODE	TEMPLATE_CODE
LAST_FAILURE_CODE	

The following example shows the FMU translation of a last-failure code.

```
FMU>DESCRIBE LAST_FAILURE_CODE 206C0020
Last Failure Code: 206C0020
Description: Controller was forced to restart in order for new controller
code image to take effect.
Reporting Component: 32.(20)
Description: Command Line Interpreter
Reporting component’s event number: 108.(6C)
Restart Type: 2.(02)
Description: Automatic hardware restart
```

Instance Codes and Last-Failure Codes

Instance codes identify and accompany significant events that do not cause the controller to terminate operation; last-failure codes identify and accompany failure events that cause the controller to stop operating. Last-failure codes are sent to the host only after the affected controller is restarted successfully.

Controlling the Display of Significant Events and Failures

You can control how the fault-management software displays significant events and failures with FMU's SET command.

Table 4–7 describes various SET commands that you can enter while running FMU. These commands remain in effect only as long as the current FMU session remains active, unless you enter the PERMANENT qualifier—the last entry in Table 4–7.

Table 4–7 FMU SET Commands

Command	Result
SET EVENT_LOGGING SET NOEVENT_LOGGING	enable and disable the spontaneous display of significant events to the local terminal; preceded by "%EVL." By default, logging is enabled (SET EVENT_LOGGING). When logging is enabled, the controller spontaneously displays information about the events on the local terminal. Spontaneous event logging is suspended during the execution of CLI commands and operation of utilities on a local terminal. Because these events are spontaneous, logs are not stored by the controller.
SET LAST_FAILURE LOGGING SET NOLAST_FAILURE LOGGING	enable and disable the spontaneous display of last failure events; preceded by "%LFL." By default, logging is enabled (SET LAST_FAILURE LOGGING). The controller spontaneously displays information relevant to the sudden termination of controller operation. In cases of automatic hardware reset (for example, power failure or pressing the controller's reset button), the fault LED log display is inhibited because automatic resets do not allow sufficient time to complete the log display.
SET *log_type* REPAIR_ACTION SET *log_type* NOREPAIR_ACTION	enable and disable the inclusion of repair action information for event logging or last-failure logging. By default, repair actions are not displayed for these log types (SET *log_type* NOREPAIR_ACTION). If the display of repair actions is enabled, the controller displays any of the recommended repair actions associated with the event.
SET *log_type* VERBOSE SET *log_type* NOVERBOSE	enable and disable the automatic translation of event codes that are contained in event logs or last-failure logs. By default, this descriptive text is not displayed (SET *log_type* NOVERBOSE). See "Translating Event Codes," page 4–40, for instructions to translate these codes manually.

Table 4–7 FMU SET Commands (Continued)

Command	Result
SET PROMPT SET NOPROMPT	enable and disable the display of the CLI prompt string following the log identifier “%EVL,” or “%LFL,” or “%FLL.” This command is useful if the CLI prompt string is used to identify the controllers in a dual-redundant configuration (see the *HSG80 ACS Version 8.x Configuration and CLI Reference Guide* for instructions to set the CLI command string for a controller). If enabled, the CLI prompt will be able to identify which controller sent the log to the local terminal. By default, the prompt is set (SET PROMPT).
SET TIMESTAMP SET NOTIMESTAMP	enable and disable the display of the current date and time in the first line of an event or last-failure log. By default, the timestamp is set (SET TIMESTAMP)
SET FMU_REPAIR_ACTION SET FMU_NOREPAIR_ACTION	enable and disable the inclusion of repair actions with SHOW LAST_FAILURE and SHOW MEMORY_SYSTEM_FAILURE commands. By default, the repair actions are not shown (SET FMU NOREPAIR_ACTION). If repair actions are enabled, the command outputs display all of the recommended repair actions associated with the instance or last-failure codes used to describe an event.
SET FMU VERBOSE SET FMU NOVERBOSE	enable and disable the inclusion of instance and last failure code descriptive text with SHOW LAST_FAILURE and SHOW MEMORY_SYSTEM_ FAILURE commands. By default, this descriptive text is not displayed (SET FMU_NOVERBOSE). If the descriptive text is enabled, it identifies the fields and their numeric content that comprise an event or last-failure entry.
SET CLI_EVENT_REPORTING SET NOCLI_EVENT_REPORTING	enable and disable the asynchronous errors reported at the CLI prompt (for example, “swap signals disabled” or “shelf has a bad power supply”). Preceded by “%CER.” By default, these errors are reported (SET CLI_EVENT_REPORTING). These errors are cleared with the CLEAR ERRORS_CLI command.

Table 4–7 FMU SET Commands (Continued)

Command	Result
SET FAULT_LED_LOGGING SET NOFAULT_LED_LOGGING	enable and disable the solid fault LED event log display on the local terminal. Preceded by "%FLL." By default, logging is enabled (SET FAULT_LED_LOGGING). When enabled, and a solid fault pattern is displayed in the OCP LEDs, the fault pattern and its meaning are displayed on the maintenance terminal. For many of the patterns, additional information is also displayed to aid in problem diagnosis. In cases of automatic hardware reset (for example, power failure or pressing the controller's reset button), the fault LED log display is inhibited because automatic resets do not allow sufficient time to complete the log display.
SHOW PARAMETERS	displays the current settings associated with the SET command.
SET *command* PERMANENT	preserves the SET command across controller resets.

Using VTDPY to Check for Communication Problems

Use the virtual terminal display (VTDPY) utility to get information about the following communications:

- Communication between the controller and its hosts
- Communication between the controller and the devices in the subsystem
- The state and I/O activity of the logical units, devices, and device ports in the subsystem

Use the following steps to run VTDPY:

1. Connect a terminal to the controller. The terminal must support ANSI control sequences.

2. Set the terminal to NOWRAP mode to prevent the top line of the display from scrolling off of the screen.
3. Start VTDPY with the following command:

```
RUN VTDPY
```

Use the key sequences and commands listed in Table 4–8 to control VTDPY.

Table 4–8 VTDPY Key Sequences and Commands

Command	Action
Ctrl/C	Enables command mode; after entering Ctrl/C, enter one of the following commands and press Return: CLEAR DISPLAY CACHE DISPLAY DEFAULT DISPLAY DEVICE DISPLAY HOST DISPLAY STATUS HELP INTERVAL *seconds* (to change update interval)
Ctrl/G	Updates screen
Ctrl/O	Pauses (and resumes) screen updates
Ctrl/R	Refreshes current screen display
Ctrl/Y	Exits VTDPY

You may abbreviate the commands to the minimum number of characters necessary to identify the command. Enter a question mark (?) after a partial command to see the values that can follow the supplied command. For example, if you enter DISP ?, the utility will list CACHE, DEFAULT, and so forth. (Separate “DISP” and “?” with a space.) Upon successfully executing a command—other than HELP—VTDPY exits command mode. Pressing Return without a command also causes VTDPY to exit command mode.

Checking Controller-to-Host Communications

Use the display host VTDPY command to see how or if the controller is communicating with the host (see Figure 4–1).

```
VTDPY> DISPLAY DEFAULT

                            S/N: ZG74100120 SW: R052G-0 HW: 00-00

                                  35.8% Idle 98237 KB/S 1559 Rq/S

Pr Name    Stk/Max Typ  Sta CPU%  Target             Unit   ASWC  KB/S  Rd%   Wr% Cm% HT%
0  NULL    0/0          Rn  35.8  111111             D0000  o^a   3288  100   0   0   100
4  HP_MAIN 40/2    FNC  Rn  64.1  0123456789012345   D0001  o^a   3288  100   0   0   100
                                  P1 DDD hH          D0002  o^a   3288  100   0   0   100
                                  o2 DDD hH          D0003  o^a   3283  100   0   0   100
                                  r3 DDD hH          D0004  o^a   8800  100   0   0   100
                                  t4 DDD hH          D0005  o^a   8918  100   0   0   100
                                  5 DDD hH           D0006  o^a   8795  100   0   0   100
                                  6 DDD hH           D0007  o^a   8725  100   0   0   100
                                                     D0100  o^a   6254  100   0   0   100
                                                     D0101  o^a   6211  100   0   0   100
                                                     D0102  o^a   6227  100   0   0   100
                                                     D0103  o^a   6265  100   0   0   100
                                                     D0104  o^a   6216  100   0   0   100
                                                     D0105  o^a   6222  100   0   0   100
                                                     D0106  o^a   6227  100   0   0   100
                                                     D0107  o^a   6222  100   0   0   100
```

Figure 4–1. Xfer Rate Region of the Default Display

Checking Controller-to-Device Communications

Use the VTDPY display device to see how or if the controller is communicating with the devices in the subsystem (see Figure 4–2). This display contains three important regions:

- Device map region (upper left)
- Device status region (upper right)
- Device-port status region (lower left)

```
VTDPY>DISPLAY DEVICE

                                            S/N: ZG64100176 SW: v7.0 HW: CX-02

                              67% I/D    99.9% Idle    0 KB/S   Up: 0 5:17.54

Target                        PTL        ASWF    Rq/S    RdKB/S  WrKB/S  Que  Tg   BR  ER
111111                        P1120       A^       0       0        0     0    0   0    0
0123456789012345              D1130       A^       0       0        0     0    0   0    0
P1 hH PDD                     D1140       A^       0       0        0     0    0   0    0
o2 hH DDD                     D2120       A^       0       0        0     0    0   0    0
r3 ????hH                     D2130       A^       0       0        0     0    0   0    0
t4 hH DDD                     D2150       a^       0       0        0     0    0   0    0
5   P  hH                     ?3020        ^F      0       0        0     0    0   0    0
6 DDD  hH                     ?3030        ^F      0       0        0     0    0   0    0
                              ?3040        ^F      0       0        0     0    0   0    0
                              ?3050        ^F      0       0        0     0    0   0    0
                              D4090       A^       0       0        0     0    0   0    0
                              D4100       A^       0       0        0     0    0   0    0
                              D4110       A^       0       0        0     0    0   0    0
                              P5030       A^       0       0        0     0    0   0    0
                              D6010       A^       0       0        0     0    0   0    0
                              D6020       A^       0       0        0     0    0   0    0
                              D6030       A^       0       0        0     0    0   0    0


 Port  Rq/S  RdKB/S   WrKB/S    CR    BR     TR
  1     0      0        0       0      0     0
  2     0      0        0       0      0     0
  3     0      0        0       0      0     0
  4     0      0        0       0      0     0
  5     0      0        0       0      0     0
  6     0      0        0       0      0     0
```

Figure 4–2. Regions on the Device Display

Checking Device Type and Location

The device map region of the device display (upper left) shows all of the devices that the controller recognizes through its device ports. Table 4–9 lists the heading and contents for each column of the device map region.

Table 4–9 Device Map Columns

Column	Contents
Port	SCSI ports 1 through 6.
Target	SCSI targets 0 through 15. Single controllers occupy 7; dual-redundant controllers occupy 6 and 7.
	D = disk drive or CD-ROM drive
	F = foreign device
	H = this controller
	h = other controller in dual-redundant configurations
	P = passthrough device
	? = unknown device type
	= no device at this port/target location

Checking Device Status and I/O Activity

The device status region of the device display (upper right) shows the name and I/O characteristics for all of the devices that the controller recognizes. Table 4–10 lists the heading and contents for each column of the device status region.

Table 4–10 Device Status Columns

Column	Contents		
PTL	Kind of device and its port-target-lun (PTL) location:		
	D	=	disk drive
	P	=	passthrough device
	?	=	unknown device type
		=	no device at this port/target location
A	Availability of the device:		
	A	=	available to this controller
	a	=	available to other controller
	U	=	unavailable, but configured on “this controller”
	u	=	unavailable, but configured on “other controller”
		=	unknown availability state
S	Spindle state of the device:		
	^	=	disk spinning at correct speed; tape loaded
	>	=	disk spinning up
	<	=	disk spinning down
	v	=	disk not spinning
		=	unknown spindle state
W	Write-protection state of the device. For disk drives, a W in this column indicates that the device is hardware write-protected. This column is blank for other kinds of devices.		
F	Fault state of the device. An F in this column indicates an unrecoverable device fault. If this field is set, the device fault LED should also be lit.		
Rq/S	Average request rate for the device during the last update interval. Requests can be up to 32K and generated by host or cache activity.		
RdKB/S	Average data transfer rate from the device (reads) during the last update interval.		

Table 4–10 Device Status Columns (Continued)

Column	Contents
WrKB/S	**Average data transfer rate to the device (writes) during the last update interval.**
Que	**Maximum number of I/O requests waiting to be transferred to the device during the last update interval.**
Tg	**Maximum number of requests queued to the device during the last update interval. If the device doesn’t support tagged queuing, the maximum value is 1.**
BR	**Number of SCSI bus resets that occurred since VTDPY was started.**
ER	**Number of SCSI errors received. If the device is swapped or deleted, then the value clears and resets to 0.**

Checking Device-Port Status and I/O Activity

The device-port status region of the device display (lower left) shows the I/O characteristics for the controller’s device ports. Table 4–11 lists the heading and contents for each column of the device-port status region.

Table 4–11 Device-Port Status Columns

Column	Contents
Port	**SCSI device ports 1 through 6.**
Rq/S	**Average request rate for the port during the last update interval. Requests can be up to 32K and generated by host or cache activity.**
RdKB/S	**Average data transfer rate from the devices on the port (reads) during the last update interval.**
WrKB/S	**Average data transfer rate to the devices on the port (writes) during the last update interval.**

Table 4–11 Device-Port Status Columns (Continued)

Column	Contents
CR	Number of SCSI command resets that occurred since VTDPY was started.
BR	Number of SCSI bus resets that occurred since VTDPY was started.
TR	Number of SCSI target resets that occurred since VTDPY was started.

Checking Unit Status and I/O Activity

Use the cache display to see the status and I/O activity for the logical units configured on the controller (see Figure 4–3). Table 4–12 lists the heading and contents for each column of the device status region.

```
VTDPY> DISPLAY CACHE

                     S/N: ZG64100176 SW: v7.0 HW: CX-02

             66% I/D   Hit  99.8% Idle    0 KB/S 0 Rq/S    Up: 0  5:16.42

Unit   ASWC        KB/S    Rd%   Wr%   Cm%   HT%   PH%   MS%  Purge BlChd BlHit
P0300  o             0      0     0     0     0     0     0     0     0     0
D0303  o^ b          0      0     0     0     0     0     0     0     0     0
D0304                0      0     0     0     0     0     0     0     0     0
P0400                0      0     0     0     0     0     0     0     0     0
P0401                0      0     0     0     0     0     0     0     0     0
D0402  x^ b          0      0     0     0     0     0     0     0     0     0
```

Figure 4–3. Unit Status on the Cache Display

Table 4–12 Unit Status Columns

Column	Contents		
Unit	Kind of unit (and its unit number):		
	D	=	disk drive or CD-ROM drive
	P	=	passthrough device
	?	=	unknown device type

Table 4–12 Unit Status Columns (Continued)

Column	Contents		
A	Availability of the unit:		
	a	=	available to other controller
	d	=	disabled for servicing, offline
	e	=	mounted for exclusive access by a user
	f	=	media format error
	i	=	inoperative
	m	=	maintenance mode for diagnostic purposes
	o	=	online. Host may access this unit through “this controller.”
	r	=	rundown with the SET NORUN command
	v	=	no volume mounted due to lack of media
	x	=	online. Host may access this unit through “other controller.”
		=	unknown availability
S	Spindle state of the device:		
	^	=	disk spinning at correct speed; tape loaded
	>	=	disk spinning up; tape loading
	<	=	disk spinning down; tape unloading
	v	=	disk not spinning; tape unloaded
		=	unknown spindle state
W	Write-protection state. For disk drives, a W in this column indicates that the device is hardware write-protected. This column is blank for units that comprise other kinds of devices.		

Table 4–12 Unit Status Columns (Continued)

Column	Contents
C	Caching state of the device:
	a = read, write-back, and read-ahead caching enabled
	b = read and write-back caching enabled
	c = read and read-ahead caching enabled
	p = read-ahead caching enabled
	r = read caching only
	= caching disabled
KB/S	Average amount of data transferred to and from the unit during the last update interval in 1000-byte increments.
Rd%	Percentage of data transferred between the host and the unit that were read from the unit.
Wr%	Percentage of data transferred between the host and the unit that were written to the unit.
CM%	Percentage of data transferred between the host and the unit that were compared. A compare operation can accompany a read or a write operation, so this column is not the sum of columns Rd% and Wr%.
HT%	Cache-hit percentage for data transferred between the host and the unit.
PH%	Partial cache-hit percentage for data transferred between the host and the unit.
MS%	Cache-miss percentage for data transferred between the host and the unit.
Purge	Number of blocks purged from the cache during the last update interval.
BlChd	Number of blocks added to the cache during the last update interval.
BlHit	Number of blocks hit during the last update interval.

Checking Fibre Channel Link Errors

You can also use the display host VTDPY command to check for any channel link errors (see Figure 4–4).

> **NOTE:** The following section outlines the VTDPY display for “this controller” only. To see other connections, you must run VTDPY again on the “other controller.”

```
FIBRE CHANNEL HOST STATUS DISPLAY

********* KNOWN HOSTS **********      ******* PORT 1 *******         ******* PORT 2 *******
## NAME      BB FrSz ID/ALPA P S  Topology              :   LOOP Topology              :  LOOP
00 ASSIGN     0 2048    01   1 F  Current Status        :STNDBY  Current Status        :  LOOP
01 !NEWCON47  0 2048    81   2 N  Current ID/ALPA       :        Current ID/ALPA       :    e4
                                  Tachyon Status        :      0 Tachyon Status        :     0
                                  Queue Depth           :      0 Queue Depth           :    24
                                  Busy/QFull Rsp        :      0 Busy/QFull Rsp        :     0
                                   LINK ERROR COUNTERS            LINK ERROR COUNTERS
                                  Link Downs            :     30 Link Downs            :     5
                                  Soft Inits            :     14 Soft Inits            :     6
                                  Hard Inits            :      0 Hard Inits            :     0
                                  Loss of Signals       :      0 Loss of Signals       :     0
                                  Bad Rx Chars          :    243 Bad Rx Chars          :   207
                                  Loss of Syncs         :      0 Loss of Syncs         :     0
                                  Link Fails            :      0 Link Fails            :     0
                                  Received EOFa         :      0 Received EOFa         :     0
                                  Generated EOFa        :      0 Generated EOFa        :     0
                                  Bad CRCs              :      0 Bad CRCs              :     0
                                  Protocol Errors       :      0 Protocol Errors       :     0
                                  Elastic Errors        :      0 Elastic Errors        :     1
```

Figure 4–4. Fibre Channel Host Status Display

Use the VTDPY>CLEAR command to clear the host display link error counters.

Table 4–13 outlines the “Known Hosts” portion of the Fibre Channel Host Status Display that appears with the display host VTDPY command. For a more detailed explanation on certain field labels and their definitions, consult the FC-PH specification.

Table 4–13 Fibre Channel Host Status Display- Known Hosts (Connections)

Field Label	Description
##	Internal ID
NAME	Refer to the SHOW *connection* command in *HSG80 ACS Version 8.x Configuration and CLI Reference Guide*.
BB	Buffer-to-buffer credit
FrSz	Frame size
ID/ALPA	Host ID
P	Port number (1 or 2)
S	Status: N = online F = offline

The following tables detail the remaining portions of the Fibre Channel Host Status Display. Table 4–14 includes the labels that report the status of ports one and two, and Table 4–15 describes the Link Error Counters.

Table 4–14 Fibre Channel Host Status Display- Port Status

Field Label	Description
Topology	LOOP OFFLNE
Current Status	DOWN LOOP STNDBY
Current ID/ALPA	Controller ID
TACHYON™ Chip Status	This denotes the current state of the TACHYON or Fibre Channel control chip. See “TACHYON Chip Status,” page 4–58, for more detail.
Queue Depth	Queue depth shows the instantaneous number of commands at the controller port.
Busy/QFull RSP	This field represents the total number of QFull/Busy responses sent by the port.

Table 4–15 Fibre Channel Host Status Display- Link Error Counters

Field Label	Description
Link Downs	This field refers to the total number of link down/up transitions.
Soft Inits	Soft initializations are the number of loop initialization caused by this port.
Hard Inits	Hard initializations indicate the number of TACHYON chip resets.
Loss of Signals	Loss of signals show the number of times the Frame Manager detected a low-to-high transition on the lnk_unuse signal.

Table 4–15 Fibre Channel Host Status Display- Link Error Counters (Continued)

Field Label	Description
Bad Rx Chars	This field represents the number of times the 8B/10B decode detected an invalid 10-bit code. FC-PH denotes this value as “Invalid Transmission Word during frame reception.” This field may be non-zero after initialization. After initialization, the host should read this value to determine the correct starting value for this error count.
Loss of Syncs	Loss of Sync denotes the number of times the loss of sync is greater than RT_TOV.
Link Fails	This field indicates the number of times the Frame Manager detected a NOS or other initialization protocol failure that caused a transition to the Link Failure state.
Received EOFa	Received EOFa refers to the number of frames containing an EOFa delimiter that the TACHYON chip has received.
Generated EOFa	This field reveals the number of problem frames that the TACHYON chip has received that caused the Frame Manager to attach an EOFa delimiter. Frames that the TACHYON chip discarded due to internal FIFO overflow are not included in this or any other statistic.
Bad CRCs	Bad CRCs denotes the number of bad CRC frames that the TACHYON chip has received.
Protocol Errors	This field indicates the number of protocol errors that the Frame Manager has detected.
Elastic Errors	Elastic errors reveal the timing difference between the receive and transmit clocks and usually indicate cable pulls.

TACHYON Chip Status

The number that appears in the TACHYON Status field represents the current state of the TACHYON or Fibre Channel control chip. It consists of a two-digit hexadecimal number, the first of which is explained in Table 4–16. The second digit is outlined in Table 4–17. Refer to the Hewlett-Packard© TACHYON user's manual for a more detailed explanation of the TACHYON chip definitions.

Table 4–16 First Digit on the TACHYON Chip

State	Definition	State	Definition
0	MONITORING	8	INITIALIZING
1	ARBITRATING	9	O_I INIT FINISH
2	ARBITRATION WON	A	O_I PROTOCOL
3	OPEN	B	O_I LIP RECEIVED
4	OPENED	C	HOST CONTROL
5	XMITTED CL0SE	D	LOOP FAIL
6	RECEIVED CLOSE	F	OLD PORT
7	TRANSFER		

Table 4–17 Second Digit on the TACHYON Chip

State	Definition	State	Definition
0	OFFLINE	6	LR2
1	OL1	7	LR3
2	OL2	9	LF1
3	OL3	A	LF2
5	LR1	F	ACTI VE

Disk Inline Exerciser (DILX)

Checking for Disk-Drive Problems

Use the disk inline exerciser (DILX) to check the data-transfer capability of disk drives. DILX generates intense read/write loads to the disk drive while monitoring the drive's performance and status. You may run DILX on as many disk drives as you'd like, but because this utility creates substantial I/O loads on the controller, Compaq recommends that you stop host-based I/O during the test. You may also use DILX to exercise the read capability of CD-ROM drives.

IMPORTANT: DILX cannot be run on remote copy sets.

Finding a Disk Drive in the Subsystem

Use the following steps to find a disk drive or device in the subsystem:

1. Connect a PC or a terminal to the controller's maintenance port.
2. Show the devices that are configured on the controller with the following command:

   ```
   SHOW DEVICES
   ```

3. Find the device in the enclosure with the following command:

   LOCATE *device-name*

   This command causes the device's LED to blink continuously.

4. Enter the following command to turn off the LED:

   ```
   LOCATE CANCEL
   ```

Testing the Read Capability of a Disk Drive

Use the following steps to test the read capability of a disk drive:

1. From a host console, dismount the logical unit that contains the disk drive you want to test.

2. Connect a terminal to the maintenance port of the controller that accesses the disk drive you want to test.
3. Run DILX with the following command:

```
RUN DILX
```

4. Decline the Auto-configure option so that you can specify the disk drive to test.
5. Accept the default test settings and run the test in read-only mode.
6. Enter the unit number of the disk drive you want to test. For example, to test D107, enter the number 107.
7. If you want to test more than one disk drive, enter the appropriate unit numbers when prompted. Otherwise, enter "n" to start the test. Use the control sequences listed in Table 4–18 to control DILX during the test.

Table 4–18 DILX Control Sequences

Command	Action
Ctrl/C	Terminates the test
Ctrl/G	Displays the performance summary for the current test and continue testing
Ctrl/Y	Terminates the test and exits DILX

Testing the Read and Write Capabilities of a Disk Drive

Run a DILX Basic Function test to test the read and write capability of a disk drive. During the Basic Function test, DILX runs the following four tests. (DILX repeats the last three tests until the time that you specify in step 6 on page 4-63 expires.)

- **Write test.** Writes specific patterns of data to the disk drive (see Table 4–19.) DILX does not repeat this test.
- **Random I/O test.** Simulates typical I/O activity by issuing read, write, access, and erase commands to randomly-chosen logical block numbers (LBNs). You can set the ratio of these commands as well as the percentage of read and write data that are compared throughout this test. This test takes six minutes.
- **Data-transfer test.** Tests throughput by starting at an LBN and transferring data to the next LBN that has not been written to. This test takes two minutes.
- **Seek test.** Stimulates head motion on the disk drive by issuing single-sector erase and access commands. Each I/O uses a different track on each subsequent transfer. You can set the ratio of access and erase commands. This test takes two minutes.

Table 4–19 Data Patterns for Phase 1: Write Test

Pattern	Pattern in Hexadecimal Numbers
1	0000
2	8B8B
3	3333
4	3091
5	0001, 0003, 0007, 000F, 001F, 003F, 007F, 00FF, 01FF, 03FF, 07FF, 0FFF, 1FFF, 3FFF, 7FFF
6	FIE, FFFC, FFFC, FFFC, FFE0, FFE0, FFE0, FFE0, FE00, FC00, F800, F000, F000, C000, 8000, 0000
7	0000, 0000, 0000, FFFF, FFFF, FFFF, 0000, 0000, FFFF, FFFF, 0000, FFFF, 0000, FFFF, 0000, FFFF
8	B6D9
9	5555, 5555, 5555, AAAA, AAAA, AAAA, 5555, 5555, AAAA, AAAA, 5555, AAAA, 5555, AAAA, 5555, AAAA, 5555
10	DB6C
11	2D2D, 2D2D, 2D2D, D2D2, D2D2, D2D2, 2D2D, 2D2D, D2D2, D2D2, 2D2D, D2D2, 2D2D, D2D2, 2D2D, D2D2
12	6DB6
13	0001, 0002, 0004, 0008, 0010, 0020, 0040, 0080, 0100, 0200, 0400, 0800, 1000, 2000, 4000, 8000
14	FIE, FFFD, FFFB, FFF7, FFEF, FFDF, FFBF, FF7F, FEFF, FDFF, FBFF, F7FF, EFFF, BFFF, DFFF, 7FFF
15	DB6D, B6DB, 6DB6, DB6D, B6DB, 6DB6, DB6D, B6DB, 6DB6, DB6D, B6DB, 6DB6, DB6D
16	3333, 3333, 3333, 1999, 9999, 9999, B6D9, B6D9, B6D9, B6D9, FFFF, FFFF, 0000, 0000, DB6C, DB6C
17	9999, 1999, 699C, E99C, 9921, 9921, 1921, 699C, 699C, 0747, 0747, 0747, 699C, E99C, 9999, 9999
18	FFFF

Use the following steps to test the read and write capabilities of a specific disk drive:

1. From a host console, dismount the logical unit that contains the disk drive you want to test.
2. Connect a terminal to the maintenance port of the controller that accesses the disk drive you want to test.
3. Run DILX with the following command:

   ```
   RUN DILX
   ```

4. Decline the auto-configure option so that you can specify the disk drive to test.

   IMPORTANT: Use the auto-configure option if you want to test the read and write capabilities of every disk drive in the subsystem.

5. Decline the default settings.
6. Enter the number of minutes you want the DILX Basic Function test to run.

   NOTE: To ensure that DILX accesses the entire disk space, you should enter 120 or more.

7. Enter the number of minutes between the display of performance summaries.
8. Choose to include performance statistics in the summary.
9. Choose to display both hard and soft errors.
10. Choose to display the hex dump.
11. Accept the hard-error limit default.
12. Accept the soft-error limit default.
13. Accept the queue depth default.
14. Choose option 1 to run a Basic Function test.
15. Enable phase 1, the write test.
16. Accept the default percentage of requests that DILX issues as read requests during phase 2, the random I/O test. DILX issues the balance as write requests.
17. Choose ALL for the data patterns that DILX issues for write requests.

18. Perform the initial write pass.
19. Allow DILX to compare the read and write data.
20. Accept the default percentage of reads and writes that DILX compares.
21. Enter the unit number of the disk drive you want to test. For example, if you want to test D107, enter the number 107.
22. If you want to test more than one disk drive, enter the appropriate unit numbers when prompted, otherwise, enter “n” to start the test. Use the command sequences shown in Table 4–18 to control the write test.

DILX Error Codes

Table 4–20 explains the error codes that DILX may display during and after testing.

Table 4–20 DILX Error Codes

Error Code	Explanation
1	Illegal Data Pattern Number found in data pattern header. DILX read data from the disk and discovered that the data did not conform to the pattern in which it was previously written.
2	No write buffers correspond to data pattern. DILX read a legal data pattern from the disk, but because no write buffers correspond to the pattern, the data must be considered corrupt.
3	Read data does not match write buffer. DILX compared the read and write data and discovered that they didn’t correspond.

Configuration Utility

Use the configuration (CONFIG) utility to add one or more storage devices to the subsystem. This utility checks the device ports for new disk drives then adds them to the controller’s configuration and automatically names them. See the *HSG80 ACS Version 8.x Configuration and CLI Reference Guide*, for more information about using the CONFIG utility.

HSUTIL

Use HSUTIL to upgrade the firmware on disk drives in the subsystem and to format disk drives. See Chapter 3, “Upgrading Firmware on a Device,” page 3–14, for more information on using HSUTIL. While you are formatting disk drives or installing new firmware, HSUTIL may produce one or more of the messages in Table 4–21 (many of the self-explanatory messages have been omitted).

Table 4–21 HSUTIL Messages and Inquiries

Message	Description
Insufficient resources	HSUTIL cannot find or perform the operation because internal controller resources are not available.
Unable to change operation mode to maintenance for unit	HSUTIL was unable to put the source single disk drive unit into maintenance mode to enable formatting or code load.
Unit successfully allocated	HSUTIL has allocated the single disk drive unit for code load operation. At this point, the unit and its associated device are not available for other subsystem operations.
Unable to allocate unit	HSUTIL could not allocate the single disk drive unit. An accompanying message explains the reason.
Unit is owned by another sysop	Device cannot be allocated because it is being used by another subsystem function or local program.
Unit is in maintenance mode	Device cannot be formatted or code loaded because it is being used by another subsystem function or local program.
Exclusive access is declared for unit	Another subsystem function has reserved the unit shown.
The other controller has exclusive access declared for unit	The companion controller has locked out this controller from accessing the unit shown.
The RUNSTOP_SWITCH is set to RUN_DISABLED for unit	The RUN\NORUN unit indicator for the unit shown is set to NORUN; the disk cannot spin up.

Table 4–21 HSUTIL Messages and Inquiries (Continued)

Message	Description
What BUFFER SIZE, (in BYTES), does the drive require (2048, 4096, 8192) [8192]?	HSUTIL detects that an unsupported device has been selected as the target device and the firmware image requires multiple SCSI Write Buffer commands.You must specify the number of bytes to be sent in each Write Buffer command. The default buffer size is 8192 bytes. A firmware image of 256 K, for example, can be code loaded in 32 Write Buffer commands, each transferring 8192 bytes.
What is the TOTAL SIZE of the code image in BYTES [*device default*]?	HSUTIL detects that an unsupported device has been selected as the target device. You must enter the total number of bytes of data to be sent in the code load operation.
Does the target device support only the download microcode and save?	HSUTIL detects that an unsupported device has been selected as the target device. You must specify whether the device supports the SCSI Write Buffer command’s download and save function.
Should the code be downloaded with a single write buffer command?	HSUTIL detects that an unsupported device has been selected as the target device. You must indicate whether to download the firmware image to the device in one or more contiguous blocks, each corresponding to one SCSI Write Buffer command.

Code Load and Code Patch Utility

Use Code Load/Code Patch (CLCP) utility to upgrade the controller software and the EMU software. You can also use it to patch the controller software. When you install a new controller, you must have the correct software version and patch number. See Chapter 3, “Upgrading Controller Software,” page 3–2, for more information about using this utility.

NOTE: Only Compaq field service personnel are authorized to upload EMU microcode updates. Contact the Customer Service Center (CSC) for directions in obtaining the appropriate EMU microcode and installation guide.

Clone Utility

Use the Clone utility to duplicate the data on any unpartitioned single-disk unit, stripeset, mirrorset, or striped mirrorset. Back up the cloned data while the actual storageset remains online. When the cloning operation is done, you can back up the clones rather than the storageset or single-disk unit, which can continue to service its I/O load. When you are cloning a mirrorset, CLONE does not need to create a temporary mirrorset. Instead, it adds a temporary member to the mirrorset and copies the data onto this new member.

The CLONE utility creates a temporary, two-member mirrorset for each member in a single-disk unit or stripeset. Each temporary mirrorset contains one disk drive from the unit you are cloning and one disk drive onto which CLONE copies the data. During the copy operation, the unit remains online and active so the clones contain the most up-to-date data.

After the CLONE utility copies the data from the members to the clones, it restores the unit to its original configuration and creates a clone unit you can backup. See *HSG80 ACS Version 8.x Configuration and CLI Reference Guide* for more information about using the Clone utility.

Field Replacement Utility

Use the field replacement utility (FRUTIL) to replace a failed controller (in a dual-redundant configuration) without shutting down the subsystem.You can also use this menu-driven utility to replace cache modules and external cache batteries. See Chapter 2, “Replacement Procedures,” for a more detailed explanation of how FRUTIL is used during replacement.

IMPORTANT: FRUTIL cannot be run in remote copy set environments on the target side specifically when I/O is in progress.

Change Volume Serial Number Utility

NOTE: Only Compaq authorized service personnel may use this utility.

The Change Volume Serial Number (CHVSN) utility generates a new volume serial number (called *VSN*) for the specified device and writes it on the media. It is a way to eliminate duplicate volume serial numbers and to rename duplicates with different volume serial numbers.

Device Statistics Utility

The Device Statistics (DSTAT) utility allows you to log I/O activity on a controller over an extended period of time. Later, you can analyze that log to determine where the bottlenecks are and how to tune the controller for optimum performance.

Chapter 5

Event Reporting: Templates and Codes

This chapter describes the event codes that the fault-management software generates for spontaneous events and last-failure events.

The HSG80 controller uses various codes to report different types of events, and these codes are presented in template displays. Instance Codes are unique codes that identify events, ASC and ASCQ codes explain the cause of the events, and Last Failure codes describe unrecoverable conditions that may occur with the controller.

Passthrough Device Reset Event Sense Data Response

Events reported by passthrough devices during host/device operations are conveyed directly to the host system without intervention or interpretation by the HSG80controller, with the exception of device sense data that is truncated to 160 bytes when it exceeds 160 bytes.

Events related to passthrough device recognition, initialization, and SCSI bus communication events that result in a reset of a passthrough device by the HSG80 controller are reported using standard SCSI Sense Data, as shown in Figure 5–1. For all other events, refer to the templates to follow.

- Instance Codes (byte offset 32-35) are described in Table 5–1, "Instance Codes."
- ASC and ASCQ codes (byte offsets 12 and 13) are described in Table 5–7, "ASC and ASCQ Codes."

off \ bit	7	6	5	4	3	2	1	0
0	Valid	Error Code						
1	Segment							
2	FM	EOM	ILI	Rsvd	Sense Key			
3-6	Information							
7	Additional Sense Length							
8-11	Instance Code							
12	Additional Sense Code (ASC)							
13	Additional Sense Code Qualifier (ASCQ)							
14	Field Replaceable Unit Code							
15	SKSV	Sense Key Specific						
16								
17								

CXO-5093A-MC

Figure 5–1. Passthrough Device Reset Event Sense Data Response Format

Last Failure Event Sense Data Response

Unrecoverable conditions detected by either software or hardware and certain operator-initiated conditions result in the termination of HSG80 controller operation. In most cases, following such a termination, the controller will attempt to restart (that is, reboot) with hardware components and software data structures initialized to the states necessary to perform normal operations (see Figure 5–2).

- Instance Codes (byte offset 32-35) are described in Table 5–1, “Instance Codes.”
- ASC and ASCQ codes (byte offsets 12 and 13) are described in Table 5–7, “ASC and ASCQ Codes.”
- Last Failure Codes (byte offset 104-107) are described in Table 5–3, “Last Failure Codes.”

off \ bit	7	6	5	4	3	2	1	0
0	Unusd	Error Code						
1	Unused							
2	Unused				Sense Key			
3-6	Unused							
7	Additional Sense Length							
8-11	Unused							
12	Additional Sense Code (ASC)							
13	Additional Sense Code Qualifier (ASCQ)							
14	Unused							
15–17	Unused							
18–31	Reserved							
32-35	Instance Code							
36	Template							
37	Template Flags							
38–53	Reserved							
54–69	Controller Board Serial Number							
70–73	Controller Software Revision Level							
74–75	Reserved							
76	LUN Status							
77–103	Reserved							
104-107	Last Failure Code							
108–111	Last Failure Parameter[0]							
112–115	Last Failure Parameter[1]							
116–119	Last Failure Parameter[2]							
120–123	Last Failure Parameter[3]							
124–127	Last Failure Parameter[4]							
128–131	Last Failure Parameter[5]							
132–135	Last Failure Parameter[6]							
136–139	Last Failure Parameter[7]							
140-159	Reserved							

CXO6175A

Figure 5–2. Template 01—Last Failure Event Sense Data Response Format

Multiple-Bus Failover Event Sense Data Response

The HSG80 SCSI Host Interconnect Services software component reports Multiple Bus Failover events via the Multiple Bus Failover Event Sense Data Response (see Figure 5–3).

- Instance Codes (byte offset 32-35) are described in Table 5–1, “Instance Codes.”
- ASC and ASCQ codes (byte offsets 12 and 13) are described in Table 5–7, “ASC and ASCQ Codes.”

off \ bit	7	6	5	4	3	2	1	0
0	Unusd	Error Code						
1	Unused							
2	Unused				Sense Key			
3-6	Unused							
7	Additional Sense Length							
8-11	Unused							
12	Additional Sense Code (ASC)							
13	Additional Sense Code Qualifier (ASCQ)							
14	Unused							
15–17	Unused							
18–26	Reserved							
27	Failed Controller Target Number							
28–31	Affected LUNs							
32–35	Instance Code							
36	Template							
37	Template Flags							
38–53	Other Controller Board Serial Number							
54–69	Controller Board Serial Number							
70–73	Controller Firmware Revision Level							
74-75	Reserved							
76	LUN Status							
77–103	Reserved							
104-131	Affected LUNs Extension (TM0)							
132-159	Reserved							

CXO5314B

Figure 5–3. Template 04—Multiple-Bus Failover Event Sense Data Response Format

Failover Event Sense Data Response

The HSG80 controller Failover Control software component reports errors and other conditions encountered during redundant controller communications and failover operation via the Failover Event Sense Data Response (see Figure 5–4).

- Instance Codes (byte offset 32-35) are described in Table 5–1, “Instance Codes.”
- ASC and ASCQ codes (byte offsets 12 and 13) are described in Table 5–7, “ASC and ASCQ Codes” on page –112.
- Last Failure Codes (byte offset 104-107) are described in Table 5–3, “Last Failure Codes” on page –55.

off \ bit	7	6	5	4	3	2	1	0
0	Unusd	Error Code						
1	Unused							
2	Unused				Sense Key			
3–6	Unused							
7	Additional Sense Length							
8–11	Unused							
12	Additional Sense Code (ASC)							
13	Additional Sense Code Qualifier (ASCQ)							
14	Unused							
15–17	Unused							
18–31	Reserved							
32–35	Instance Code							
36	Template							
37	Template Flags							
38–53	Reserved							
54–69	Controller Board Serial Number							
70–73	Controller Software Revision Level							
74–75	Reserved							
76	LUN Status							
77-103	Reserved							
104–107	Last Failure Code							
108–111	Last Failure Parameter[0]							
112–115	Last Failure Parameter[1]							
116–119	Last Failure Parameter[2]							
120–123	Last Failure Parameter[3]							
124–127	Last Failure Parameter[4]							
128–131	Last Failure Parameter[5]							
132–135	Last Failure Parameter[6]							
136–139	Last Failure Parameter[7]							
140–159	Reserved							

CXO6177A

Figure 5–4. Template 05—Failover Event Sense Data Response Format

Nonvolatile Parameter Memory Component Event Sense Data Response

The HSG80 controller Executive software component reports errors detected while accessing a Nonvolatile Parameter Memory Component via the Nonvolatile Parameter Memory Component Event Sense Data Response (see Figure 5–5).

- Instance Codes (byte offset 32-35) are described in Table 5–1, “Instance Codes.”
- ASC and ASCQ codes (byte offsets 12 and 13) are described in Table 5–7, “ASC and ASCQ Codes.”

off \ bit	7	6	5	4	3	2	1	0
0	Unusd	Error Code						
1	Unused							
2	Unused				Sense Key			
3-6	Unused							
7	Additional Sense Length							
8-11	Unused							
12	Additional Sense Code (ASC)							
13	Additional Sense Code Qualifier (ASCQ)							
14	Unused							
15–17	Unused							
18–31	Reserved							
32-35	Instance Code							
36	Template							
37	Template Flags							
38–53	Reserved							
54–69	Controller Board Serial Number							
70–73	Controller Software Revision Level							
74–75	Reserved							
76	LUN Status							
77-103	Reserved							
104–107	Memory Address							
108–111	Byte Count							
112–114	Number of Times Written							
115	Undefined							
116–159	Reserved							

CXO6178A

Figure 5–5. Template 11—Nonvolatile Parameter Memory Component Event Sense Data Response Format

Backup Battery Failure Event Sense Data Response

The HSG80 controller Value Added Services software component reports backup battery failure conditions for the various hardware components that use a battery to maintain state during power failures via the Backup Battery Failure Event Sense Data Response (see Figure 5–6).

- Instance Codes (byte offset 32-35) are described in Table 5–1, “Instance Codes.”
- ASC and ASCQ codes (byte offsets 12 and 13) are described in Table 5–7, “ASC and ASCQ Codes.”
- For more information on Instance Codes, see page 5–22.
- For a table of ASC and ASCQ codes, see page 5–112.

off \ bit	7	6	5	4	3	2	1	0
0	Unusd	Error Code						
1	Unused							
2	Unused				Sense Key			
3-6	Unused							
7	Additional Sense Length							
8-11	Unused							
12	Additional Sense Code (ASC)							
13	Additional Sense Code Qualifier (ASCQ)							
14	Unused							
15–17	Unused							
18–31	Reserved							
32-35	Instance Code							
36	Template							
37	Template Flags							
38–53	Reserved							
54–69	Controller Board Serial Number							
70–73	Controller Software Revision Level							
74-75	Reserved							
76	LUN Status							
77–103	Reserved							
104–107	Memory Address							
108–159	Reserved							

CXO6179A

Figure 5–6. Template 12—Backup Battery Failure Event Sense Data Response Format

Subsystem Built-In Self Test Failure Event Sense Data Response

The HSG80 controller Subsystem Built-In Self Tests software component reports errors detected during test execution via the Subsystem Built-In Self Test Failure Event Sense Data Response (see Figure 5–7).

- Instance Codes (byte offset 32-35) are described in Table 5–1, “Instance Codes.”
- ASC and ASCQ codes (byte offsets 12 and 13) are described in Table 5–7, “ASC and ASCQ Codes.”

off \ bit	7	6	5	4	3	2	1	0
0	Unusd	Error Code						
1	Unused							
2	Unused				Sense Key			
3-6	Unused							
7	Additional Sense Length							
8-11	Unused							
12	Additional Sense Code (ASC)							
13	Additional Sense Code Qualifier (ASCQ)							
14	Unused							
15–17	Unused							
18–31	Reserved							
32-35	Instance Code							
36	Template							
37	Template Flags							
38–53	Reserved							
54–69	Controller Board Serial Number							
70–73	Controller Software Revision Level							
74–75	Reserved							
76	LUN Status							
77-103	Reserved							
104–105	Undefined							
106	Header Type							
107	Header Flags							
108	TE							
109	Test Number							
110	Test Command							
111	Test Flags							
112–113	Error Code							
114–115	Return Code							
116–119	Address of Error							
120–123	Expected Error Data							
124–127	Actual Error Data							
128–131	Extra Status 1							
132–135	Extra Status 2							
136–139	Extra Status 3							
140-159	Reserved							

CXO6180A

Figure 5–7. Template 13—Subsystem Built-In Self Test Failure Event Sense Data Response Format

Memory System Failure Event Sense Data Response

The HSG80 controller Memory Controller Event Analyzer software component and the Cache Manager, part of the Value Added software component, report the occurrence of memory errors via the Memory System Failure Event Sense Data Response (see Figure 5–8).

- Instance Codes (byte offset 32-35) are described in Table 5–1, “Instance Codes.”
- ASC and ASCQ codes (byte offsets 12 and 13) are described in Table 5–7, “ASC and ASCQ Codes.”

off \ bit	7	6	5	4	3	2	1	0
0	Unusd	Error Code						
1	Unused							
2	Unused				Sense Key			
3-6	Unused							
7	Additional Sense Length							
8-11	Unused							
12	Additional Sense Code (ASC)							
13	Additional Sense Code Qualifier (ASCQ)							
14	Unused							
15-17	Unused							
18-19	Reserved							
20-23	Reserved or RDR2 (TM1)							
24-27	Reserved or RDEAR (TM1)							
28-31	Reserved							
32–35	Instance Code							
36	Template							
37	Template Flags							
38-39	Reserved							
40-43	Reserved or FXPSCR (TM1)							
44-47	Reserved or FXCSR (TM1)							
48-51	Reserved or FXCCSR (TM1)							
52-53	Reserved							
54-69	Controller Board Serial Number							
70-73	Controller Software Revision Level							

off \ bit	7	6	5	4	3	2	1	0
74-75	Reserved							
76	LUN Status							
77-79	Reserved							
80-83	Reserved or FXPAEC(TM1)							
84-87	Reserved or FXCAEC(TM1)							
88-91	Reserved or FXPAEP(TM1)							
92-95	Reserved or CHC (TM0) or FXCAEP(TM1)							
96-99	Reserved or CMC (TM0) or CFW(TM1)							
100-103	Reserved or DSR2 (TM0) or RRR(TM1)							
104-107	Memory Address							
108-111	Byte Count							
112-115	DSR or PSR(TM1)							
116-119	CSR or CSR(TM1)							
120-123	DCSR or EAR(TM1)							
124-127	DER or EDR1(TM1)							
128-131	EAR or EDR0(TM1)							
132-135	EDR or ICR TM1)							
136-139	ERR or IMR(TM1)							
140-143	RSR or DIO(TM1)							
144-147	RDR0							
148-151	RDR1							
152-155	WDR0							
156-159	WDR1							

CXO6181A

Figure 5–8. Template 14—Memory System Failure Event Sense Data Response Format

Device Services Non-Transfer Error Event Sense Data Response

The HSG80 controller Device Services software component reports errors detected while performing non-transfer work related to disk (including CD-ROM and optical memory) device operations via the Device Services Non-Transfer Event Sense Data Response (see Figure 5–9).

- Instance Codes (byte offset 32-35) are described in Table 5–1, “Instance Codes.”
- ASC and ASCQ codes (byte offsets 12 and 13) are described in Table 5–7, “ASC and ASCQ Codes.”

off \ bit	7	6	5	4	3	2	1	0
0	Unusd	Error Code						
1	Unused							
2	Unused				Sense Key			
3-6	Unused							
7	Additional Sense Length							
8-11	Unused							
12	Additional Sense Code (ASC)							
13	Additional Sense Code Qualifier (ASCQ)							
14	Unused							
15–17	Unused							
18–31	Reserved							
32-35	Instance Code							
36	Template							
37	Template Flags							
38–53	Reserved							
54–69	Controller Board Serial Number							
70-73	Controller Software Revision Level							
74-75	Reserved							
76	LUN Status							
77–103	Reserved							
104	Associated Port							
105	Associated Target							
106	Associated Additional Sense Code							
107	Associated Additional Sense Code Qualifier							
108–159	Reserved							

CXO6182A

Figure 5–9. Template 41—Device Services Non-Transfer Error Event Sense Data Response Format

Disk Transfer Error Event Sense Data Response

The HSG80 controller Device Services and Value Added Services software components report errors detected while performing work related to disk (including CD-ROM and optical memory) device transfer operations via the Disk Transfer Error Event Sense Data Response (see Figure 5–10).

- Instance Codes (byte offset 32-35) are described in Table 5–1, “Instance Codes.”
- ASC and ASCQ codes (byte offsets 12 and 13) are described in Table 5–7, “ASC and ASCQ Codes.”

off \ bit	7	6	5	4	3	2	1	0
0–17	Standard Sense Data							
18–19	Reserved							
20	Total Number of Errors							
21	Total Retry Count							
22–25	ASC/ASCQ Stack							
26–28	Device Locator							
29–31	Reserved							
32–35	Instance Code							
36	Template							
37	Template Flags							
38	Reserved							
39	Command Opcode							
40	Sense Data Qualifier							
41–50	Original CDB							
51	Host ID							
52–53	Reserved							
54–69	Controller Board Serial Number							
70–73	Controller Software Revision Level							
74–75	Reserved							
76	LUN Status							
77–78	Reserved							
79-82	Device Firmware Revision Level							
83–98	Device Product ID							
99–100	Reserved							
101	Device Type							
102–103	Reserved							
104	Valid	Error Code						
105	Segment							
106	FM	EOM	ILI	Rsvd	Sense Key			
107–110	Information							
111	Additional Sense Length							
112–115	Command Specific Information							
116	Additional Sense Code (ASC)							
117	Additional Sense Code Qualifier (ASCQ)							
118	Field Replaceable Unit Code							
119	SKSV	Sense Key Specific						
120								
121								
122–159	Reserved							

CXO6183B

Figure 5–10. Template 51—Disk Transfer Error Event Sense Data Response Format

Data Replication Manager Services Event Sense Response

The HSG80 Data Replication Manager Services software component reports events via the Data Replication Manager Services Event Sense Data Response.

With Data Replication Manager, fault management events reported on the target controllers are passed through and reported on the initiator controllers. The initiator then reports these events to the host. Fault management events reported on the initiator controllers are reported on Template 90, shown in Figure 5–11.

The error is signaled by a CHECK CONDITION status during the STATUS phase of the next command issued to each logical unit by each host system. In other words, the error is signaled to all host systems on all logical units.

- Instance Codes (byte offset 32-35) are described in Table 5–1, “Instance Codes.”
- ASC and ASCQ codes (byte offsets 12 and 13) are described in Table 5–7, “ASC and ASCQ Codes.”

offset	bit	7	6	5	4	3	2	1	0
0		Unused	Error Code						
1		Unused							
2		Unused				Sense Key			
3–6		Unused							
7		Additional Sense Length							
8–11		Unused							
12		Additional Sense Code (ASC)							
13		Additional Sense Code Qualifier (ASCQ)							
14		Unused							
15–17		Unused							
18–31		Reserved							
32–35		Instance Code							
36		Template							
37		Template Flags							
38–53		Target Controller Board Serial Number							
54–69		Controller Board Serial Number							
70–73		Controller Software Revision Level							
74-75		Reserved							
76		LUN Status							
77–79		Reserved							
80–95		Initiator WWLID							
96–103		Initiator Node Name							
104–107		Initiator Unit Number							
108–123		Target WWLID							
124–131		Target Node Name							
132–135		Target Unit Number							
136–139		Number of Targets							
140–148		Remote Copy Set Name							
149–159		Reserved							

Figure 5–11. Template 90—Data Replication Manager Services Event Sense Data Response Format

Instance Codes

An Instance Code is a number that uniquely identifies an event being reported.

Instance Code Structure

Figure 5–12 shows the structure of an instance code. If you understand its structure, you will be able to translate it, bypassing the fault management utility (FMU).

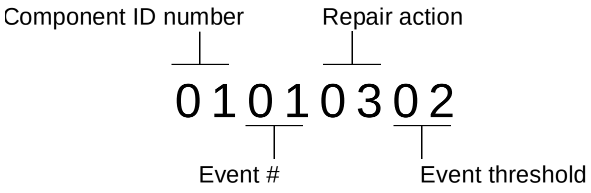
Component ID number
Repair action
0 1 0 1 0 3 0 2
Event #
Event threshold

Figure 5–12. Structure of an Instance Code

Instance Codes and FMU

The format of an Instance Code as it appears in Sense Data Responses is shown in Figure 5–13.

off \ bit	7	6	5	4	3	2	1	0
(8)32	NR Threshold							
(9)33	Repair Action							
(10)34	Error Number							
(11)35	Component ID							

CXO6470A

Figure 5–13. Instance Code Format

NOTE: The offset values enclosed in braces ({}) apply only to the passthrough device reset event sense data response format (see Figure 5–1). The nonbraced offset values apply only to the logical device event sense data response formats shown in the templates that begin on page 5–112.

NR Threshold

Located at byte offset {8}32, the NR Threshold is the notification/recovery threshold assigned to the event. This value is used during Symptom-Directed Diagnosis procedures to determine when notification/recovery action should be taken.

Repair Action

The Repair Action found at byte offset {9}33 indicates the recommended repair action code assigned to the event. This value is used during Symptom-Directed Diagnosis procedures to determine what notification/recovery action should be taken when the NR Threshold is reached. For more details about recommended repair actions, see "Recommended Repair Action Codes," page 5–102.

Event Number

Located at byte offset {10}34, the Event Number, when combined with the value contained in the Component ID field, uniquely-identifies the reported event.

Component ID

A component ID is a number that uniquely-identifies the software component that detected the event and is found at byte offset {11}35 (see "Component Identifier Codes," page 5–109).

Table 5–1 contains the instance codes that can be issued by the controller's fault-management software.

Table 5–1 Instance Codes

Instance Code	Description	Template
01010302	An unrecoverable hardware detected fault occurred.	01
0102030A	An unrecoverable software inconsistency was detected or an intentional restart or shutdown of controller operation was requested.	01
01032002	Nonvolatile parameter memory component EDC check failed; content of the component reset to default settings.	11
02020064	Disk Bad Block Replacement attempt completed for a write within the user data area of the disk. Note that due to the way Bad Block Replacement is performed on SCSI disk drives, information on the actual replacement blocks is not available to the controller and is therefore not included in the event report.	51
02032001	Journal SRAM backup battery failure; detected during system restart. The Memory Address field contains the starting physical address of the Journal SRAM.	12
02042001	Journal SRAM backup battery failure; detected during periodic check. The Memory Address field contains the starting physical address of the Journal SRAM.	12
02052301	A processor interrupt was generated by the CACHEA0 Memory Controller with an indication that the CACHE backup battery has failed or is low (needs charging). The Memory Address field contains the starting physical address of the CACHEA0 memory.	12
02072201	The CACHEAO Memory Controller failed testing performed by the Cache Diagnostics. The Memory Address field contains the starting physical address of the CACHEA0 memory.	14
02082201	The CACHEA1 Memory Controller failed testing performed by the Cache Diagnostics. The Memory Address field contains the starting physical address of the CACHEA1 memory.	14

Table 5–1 Instance Codes (Continued)

Instance Code	Description	Template
02090064	A data compare error was detected during the execution of a compare modified READ or WRITE command.	51
020B2201	Failed read test of a write-back metadata page residing in cache. Dirty write-back cached data exists and cannot be flushed to media. The dirty data is lost. The Memory Address field contains the starting physical address of the CACHEA0 memory.	14
020C2201	Cache Diagnostics have declared the cache bad during testing. The Memory Address field contains the starting physical address of the CACHEA0 memory.	14
020D2401	The wrong write cache module is configured. The serial numbers do not match. Either the existing or the expected cache contains dirty write-back cached data. Note that in this instance the Memory Address, Byte Count, FX Chip Register, Memory Controller register, and Diagnostic register fields are undefined.	14
020E2401	The write cache module is missing. A cache is expected to be configured and contains dirty write-back cached data. Note that in this instance the Memory Address, Byte Count, FX Chip Register, Memory Controller register, and Diagnostic register fields are undefined.	14
02102401	The write cache modules are not configured properly for a dual-redundant configuration. One of the cache modules is not the same size to perform cache failover of dirty write-back cached data. Note that in this instance the Memory Address, Byte Count, FX Chip Register, Memory Controller register, and Diagnostic register fields are undefined.	14

Table 5–1 Instance Codes (Continued)

Instance Code	Description	Template
02110064	Disk Bad Block Replacement attempt completed for a read within the user data area of the disk. Note that due to the way Bad Block Replacement is performed on SCSI disk drives, information on the actual replacement blocks is not available to the controller and is therefore not included in the event report.	51
021A0064	Disk Bad Block Replacement attempt completed for a write of controller metadata to a location outside the user data area of the disk. Note that due to the way Bad Block Replacement is performed on SCSI disk drives, information on the actual replacement blocks is not available to the controller and is therefore not included in the event report.	41
021B0064	Disk Bad Block Replacement attempt completed for a read of controller metadata from a location outside the user data area of the disk. Note that due to the way Bad Block Replacement is performed on SCSI disk drives, information on the actual replacement blocks is not available to the controller and is therefore not included in the event report.	41
021D0064	Unable to lock the other controller’s cache in a write-cache failover attempt. Either a latent error could not be cleared on the cache or the other controller did not release its cache. Note that in this instance the Memory Address, Byte Count, FX Chip register, Memory Controller register, and Diagnostic register fields are undefined.	14
021E0064	The device specified in the Device Locator field has been added to the RAIDset associated with the logical unit.The RAIDset is now in Reconstructing state.	51
02280064	The device specified in the Device Locator field has been added to the Mirrorset associated with the logical unit. The new Mirrorset member is now in Copying state.	51

Table 5–1 Instance Codes (Continued)

Instance Code	Description	Template
022C0064	The device specified in the Device Locator has transitioned from Copying or Normalizing state to Normal state.	51
022E0064	The device specified in the Device Locator field has been converted to a Mirrorset associated with the logical unit.	51
022F0064	The mirrored device specified in the Device Locator field has been converted to a single device associated with the logical unit.	51
02383A01	The CACHEB0 Memory Controller, which resides on the other cache module failed testing performed by the Cache Diagnostics. This is the mirrored cache Memory Controller. The Memory Address field contains the starting physical address of the CACHEB0 memory.	14
02392201	Both the CACHEB0 Memory Controller and CACHEB1 Memory Controller, which resides on the other cache module, failed testing performed by the Cache Diagnostics. Data cannot be accessed in the primary cache or the mirror cache. The Memory Address field contains the starting physical address of the CACHEA0 memory.	14
023E2401	Metadata residing in the controller and on the two cache modules disagree as to the mirror node. Note that in this instance the Memory Address, Byte Count, FX Chip register, Memory Controller register, and Diagnostic register fields are undefined.	14
023F2301	The cache backup battery covering the mirror cache is insufficiently charged. The Memory Address field contains the starting physical address of the CACHEB1 memory.	12
02402301	The cache backup battery covering the mirror cache has been declared bad. Either it failed testing performed by the Cache Diagnostics during system startup or it was low (insufficiently charged) for longer than the expected duration. The Memory Address field contains the starting physical address of the CACHEB1 memory.	12

Table 5–1 Instance Codes (Continued)

Instance Code	Description	Template
02412401	**Mirrored cache writes have been disabled. Either the primary or the mirror cache has been declared bad or data invalid and will not be used. Note that in this instance the Memory Address, Byte Count, FX Chip register, Memory Controller register, and Diagnostic register fields are undefined.**	**14**
02422464	**Cache failover attempt failed because the other cache was illegally configured with DIMMs. Note that in this instance the Memory Address, Byte Count, FX Chip register, Memory Controller register, and Diagnostic register fields are undefined.**	**14**
02492401	**The write cache module which is the mirror for the primary cache is unexpectedly not present (missing). A cache is expected to be configured and it may contain dirty write cached data. Note that in this instance, the Memory Address, Byte Count, FX Chip register, Memory Controller register, and Diagnostic register fields are undefined.**	**14**
024A2401	**Mirroring is enabled and the primary write cache module is expectedly not present (missing). A cache is expected to be configured and it may contain dirty write cached data. Note that in this instance, the Memory Address, Byte Count, FX Chip register, Memory Controller register, and Diagnostic register fields are undefined.**	**14**
024B2401	**Write-back caching has been disabled either due to a cache or battery-related problem. The exact nature of the problem is reported by other instance codes. Note that in this instance the Memory Address, Byte Count, FX Chip register, Memory Controller register, and Diagnostic register fields are undefined.**	**14**
024F2401	**This cache module is populated with DIMMs incorrectly. Cache metadata resident in the cache module indicates that unflushed write cache data exists for a cache size different than what is found present. Note that in this instance the Memory Address, Byte Count, FX Chip register, Memory Controller register, and Diagnostic register fields are undefined.**	**14**

Table 5–1 Instance Codes (Continued)

Instance Code	Description	Template
0251000A	This command failed because the target unit is not online to the controller. The Information field of the Device Sense Data contains the block number of the first block in error.	51
0252000A	The last block of data returned contains a forced error. A forced error occurs when a disk block is successfully reassigned, but the data in that block is lost. Re-writing the disk block will clear the forced error condition. The Information field of the Device Sense Data contains the block number of the first block in error.	51
0253000A	The data supplied from the host for a data compare operation differs from the data on the disk in the specified block. The Information field of the Device Sense Data contains the block number of the first block in error.	51
0254000A	The command failed due to a host data transfer failure. The Information field of the Device Sense Data contains the block number of the first block in error.	51
0255000A	The controller was unable to successfully transfer data to target unit. The Information field of the Device Sense Data contains the block number of the first block in error.	51
0256000A	The write operation failed because the unit is Data Safety Write Protected. The Information field of the Device Sense Data contains the block number of the first block in error.	51
0257000A	An attempt to reassign a bad disk block failed. The contents of the disk block is lost. The Information field of the Device Sense Data contains the block number of the first block in error.	51
0258000A	This command was aborted prior to completion. The Information field of the Device Sense Data contains the block number of the first block in error.	51

Table 5–1 Instance Codes (Continued)

Instance Code	Description	Template
0259000A	The write operation failed because the unit is hardware write protected. The Information field of the Device Sense Data contains the block number of the first block in error.	51
025A000A	The command failed because the unit became inoperative prior to command completion. The Information field of the Device Sense Data contains the block number of the first block in error.	51
025B000A	The command failed because the unit became unknown to the controller prior to command completion. The Information field of the Device Sense Data contains the block number of the first block in error.	51
025C000A	The command failed because of a unit media format error. The Information field of the Device Sense Data contains the block number of the first block in error.	51
025D000A	The command failed for an unknown reason. The Information field of the Device Sense Data contains the block number of the first block in error	51
025F2201	Memory diagnostics performed during controller initialization detected an excessive number (512 pages or more) of memory errors detected on the primary cache memory. Diagnostics have not declared the cache failed, due to the isolated bad memory regions, but this is a warning to replace the cache as soon as possible in case of further degradation. The software performed the necessary error recovery as appropriate. Note that in this instance the Memory Address and Byte Count fields are undefined.	14

Table 5–1 Instance Codes (Continued)

Instance Code	Description	Template
02603A01	Memory diagnostics performed during controller initialization detected an excessive number (512 pages or more) of memory errors detected on mirrored cache memory. Diagnostics has not declared the cache failed, due to the isolated bad memory regions, but this is a warning to replace the cache as soon as possible in case of further degradation. The software performed the necessary error recovery as appropriate. Note that in this instance the Memory Address, Byte Count fields are undefined.	14
02613801	Memory diagnostics performed during controller initialization detected that the DIMM in location 1 failed on the cache module. Note that in this instance the Byte Count field in undefined.	14
02623801	Memory diagnostics performed during controller initialization detected that the DIMM in location 2 failed on the cache module. Note that in this instance the Byte Count field in undefined.	14
02633801	Memory diagnostics performed during controller initialization detected that the DIMM in location 3 failed on the cache module. Note that in this instance the Byte Count field in undefined.	14
02643801	Memory diagnostics performed during controller initialization detected that the DIMM in location 4 failed on the cache module. Note that in this instance the Byte Count field in undefined.	14
02653C01	Memory diagnostics performed during controller initialization detected that the DIMM in location 3 on the other controller’s cache module (on mirrored cache) failed. Mirroring has been disabled. Note that in this instance the Byte Count field is undefined.	14
02663C01	Memory diagnostics performed during controller initialization detected that the DIMM in location 4 on the other controller’s cache module (on mirrored cache) failed. Mirroring has been disabled. Note that in this instance the Byte Count field is undefined.	14

Table 5–1 Instance Codes (Continued)

Instance Code	Description	Template
02675201	The device specified in the Device Locator field has been removed from the RAIDset associated with the logical unit. The removed device is now in the Failedset. The RAIDset is now in Reduced state.	51
0268530A	The device specified in the Device Locator field failed to be added to the RAIDset associated with the logical unit. The device will remain in the Spareset.	51
02695401	The device specified in the Device Locator field failed to be added to the RAIDset associated with the logical unit. The failed device has been moved to the Failedset.	51
026A5001	The RAIDset associated with the logical unit has gone inoperative.	51
026B0064	The RAIDset associated with the logical unit has transitioned from Normal state to Reconstructing state.	51
026C0064	The RAIDset associated with the logical unit has transitioned from Reconstructing state to Normal state.	51
026D5201	The device specified in the Device Locator field has been removed from the Mirrorset associated with the logical unit. The removed device is now in the Failedset.	51
026E0001	The device specified in the Device Locator field has been reduced from the Mirrorset associated with the logical unit. The nominal number of members in the mirrorset has been decreased by one. The reduced device is now available for use.	51
026F530A	The device specified in the Device Locator field failed to be added to the mirrorset associated with the logical unit. The device will remain in the Spareset.	51
02705401	The device specified in the Device Locator field failed to be added to the mirrorset associated with the logical unit. The failed device has been moved to the Failedset.	51

Table 5–1 Instance Codes (Continued)

Instance Code	Description	Template
02710064	The mirrorset associated with the logical unit has had its nominal membership changed. The new nominal number of members for the mirrorset is specified in the Device Sense Data Information field.	51
02725101	The Mirrorset associated with the logical unit has gone inoperative.	51
02730001	The device specified in the Device Locator field had a read error which has been repaired with data from another mirrorset member.	51
02745A0A	The device specified in the Device Locator field had a read error. Attempts to repair the error with data from another mirrorset member failed due to lack of alternate error-free data source.	51
02755601	The device specified in the Device Locator field had a read error. Attempts to repair the error with data from another mirrorset member failed due to a write error on the original device. The original device will be removed from the mirrorset.	51
02773D01	The mirrored cache is not being used because the data in the mirrored cache is inconsistent with the data in the primary cache. The primary cache contains valid data, so the controller is caching solely from the primary cache. The mirrored cache is declared “failed”, but this is not due to a hardware fault, only inconsistent data. Mirrored writes have been disabled until this condition is cleared. Note that in this instance the Memory Address, Byte Count, FX Chip register, Memory Controller register, and Diagnostic register fields are undefined.	14
02782301	The cache backup battery is not present. The Memory Address field contains the starting physical address of the CACHEA0 memory.	12
02792301	The cache backup battery covering the mirror cache is not present. The Memory Address field contains the starting physical address of the CACHEB1 memory.	12

Table 5–1 Instance Codes (Continued)

Instance Code	Description	Template
027A2201	The CACHEB0 Memory Controller failed Cache Diagnostics testing performed on the other cache during a cache failover attempt. The Memory Address field contains the starting physical address of the CACHEB0 memory.	14
027B2201	The CACHEB1 Memory Controller failed Cache Diagnostics testing performed on the other cache during a cache failover attempt. The Memory Address field contains the starting physical address of the CACHEB1 memory.	14
027C2201	The CACHEB0 and CACHEB1 Memory Controllers failed Cache Diagnostics testing performed on the other cache during a cache failover attempt. The Memory Address field contains the starting physical address of the CACHEB0 memory.	14
027D5B01	The Mirrorset associated with the logical unit has gone inoperative due to a disaster tolerance failsafe locked condition.	51
027E5B01	The command failed because the disaster tolerance mirrorset went failsafe locked prior to command completion. The Information field of the Device Sense Data contains the block number of the first block in error.	51
027F2301	The CACHE backup battery has been declared bad. The battery did not become fully charged within the expected duration. The Memory Address field contains the starting physical address of the CACHEA0 memory.	12
02805B01	The command failed because the disaster tolerance mirrorset is failsafe locked. The Information field of the Device Sense Data contains the block number of the first block in error.	51
02815B01	The command failed because the disaster tolerance mirrorset is failsafe locked. The Information field of the Device Sense Data contains the block number of the first block in error.	51
02825C64	The Mirrorset associated with the logical unit has just had a membership change such that disaster tolerance failsafe error mode can now be enabled if desired.	51

Table 5–1 Instance Codes (Continued)

Instance Code	Description	Template
02864002	The controller has set the specified unit Data Safety Write Protected due to an unrecoverable device failure which prevents writing cached data.	51
02872301	The CACHE backup battery has exceeded the maximum number of deep discharges. Battery capacity may be below specified values. The Memory Address field contains the starting physical address of the CACHEA0 memory.	12
02882301	The CACHE backup battery covering the mirror cache has exceeded the maximum number of deep discharges. Battery capacity may be below specified values. The Memory Address field contains the starting physical address of the CACHEB1 memory	12
02892301	The CACHE backup battery is near its end of life. The Memory Address field contains the starting physical address of the CACHEA0 memory.	12
028A2301	The CACHE backup battery covering the mirror cache is near its end of life. The Memory Address field contains the starting physical address of the CACHEB1 memory.	12
028B3801	Memory diagnostics performed during controller initialization detected that the DIMM in location 1 failed on the cache module. The failed DIMM should be replaced as soon as possible. Control Structures have been moved to secondary memory and are now unprotected against additional memory failures. Note that in this instance the Byte Count filed is undefined.	14
028C3801	Memory diagnostics performed during controller initialization detected that the DIMM in location 2 failed on the cache module. The failed DIMM should be replaced as soon as possible. Control Structures have been moved to secondary memory and are now unprotected against additional memory failures. Note that in this instance the Byte Count filed is undefined.	14

Table 5–1 Instance Codes (Continued)

Instance Code	Description	Template
028D0064	The device specified in the Device Locator field has been removed from the SPARESET into the FAILEDSET. The new nominal number of members for the SPARESET is specified in the Device Sense Data Information field.	51
028F8901	The host command failed because the remote copy set went failsafe locked prior to command completion. The remote copy set is specified by the Remote Copy Name filed. The Information field of the Device Sense Data contains the block number of the first block in error.	51
02908901	The host command failed because the remote copy set went failsafe locked prior to command completion. The remote copy set is specified by the Remote Copy Name filed. The Information field of the Device Sense Data contains the block number of the first block in error.	51
02918901	The host command failed because the remote copy set went failsafe locked prior to command completion. The remote copy set is specified by the Remote Copy Name filed. The Information field of the Device Sense Data contains the block number of the first block in error.	51
02925D01	The device specified in the Device Locator field has been removed from the SPARESET into the FAILEDSET; there are no devices left in the SPARESET. The new nominal number of members for the SPARESET is specified in the Device Sense Data Information field.	51
03010101	No command control structures available for disk operation. Note that in this instance the Associated Additional Sense Code and Associated Additional Sense Code Qualifier fields are undefined.	41
03022002	SCSI interface chip command timeout during disk operation. Note that in this instance the Associated Additional Sense Code and Associated Additional Sense Code Qualifier fields are undefined.	41

Table 5–1 Instance Codes (Continued)

Instance Code	Description	Template
03034002	Byte transfer timeout during disk operation. Note that in this instance the Associated Additional Sense Code and Associated Additional Sense Code Qualifier fields are undefined.	41
03044402	SCSI bus errors during disk operation. Note that in this instance the Associated Additional Sense Code and Associated Additional Sense Code Qualifier fields are undefined.	41
03052002	Device port SCSI chip reported gross error during disk operation. Note that in this instance the Associated Additional Sense Code and Associated Additional Sense Code Qualifier fields are undefined.	41
03062002	Non-SCSI bus parity error during disk operation. Note that in this instance the Associated Additional Sense Code and Associated Additional Sense Code Qualifier fields are undefined.	41
03070101	Source driver programming error encountered during disk operation. Note that in this instance the Associated Additional Sense Code and Associated Additional Sense Code Qualifier fields are undefined.	41
03080101	Miscellaneous SCSI Port Driver coding error detected during disk operation. Note that in this instance the Associated Additional Sense Code and Associated Additional Sense Code Qualifier fields are undefined.	41
03094002	An unrecoverable disk drive error was encountered while performing work related to disk unit operations.	51
030C4002	A Drive failed because a Test Unit Ready command or a Read Capacity command failed.	51
030D000A	Drive was failed by a Mode Select command received from the host.	51
030E4002	Drive failed due to a deferred error reported by drive.	51
030F4002	Unrecovered Read or Write error.	51
03104002	No response from one or more drives.	51

Table 5–1 Instance Codes (Continued)

Instance Code	Description	Template
0311430A	Nonvolatile memory and drive metadata indicate conflicting drive configurations.	51
0312430A	The Synchronous Transfer Value differs between drives in the same storageset.	51
03134002	Maximum number of errors for this data transfer operation exceeded.	51
03144002	Drive reported recovered error without transferring all data.	51
03154002	Data returned from drive is invalid.	51
03164002	Request Sense command to drive failed.	51
03170064	Illegal command for pass through mode.	51
03180064	Data transfer request error.	51
03194002	Premature completion of a drive command.	51
031A4002	Command timeout.	51
031B0101	Watchdog timer timeout.	51
031C4002	Disconnect timeout.	51
031D4002	Unexpected bus phase.	51
031E4002	Disconnect expected.	51
031F4002	ID Message not sent by drive.	51
03204002	Synchronous negotiation error.	51
03214002	The drive unexpectedly disconnected from the SCSI bus.	51
03224002	Unexpected message.	51
03234002	Unexpected Tag message.	51
03244002	Channel busy.	51
03254002	Message Reject received on a valid message.	51
0326450A	The disk device reported Vendor Unique SCSI Sense Data.	51

Table 5–1 Instance Codes (Continued)

Instance Code	Description	Template
03270101	A disk related error code was reported which was unknown to the Fault Management firmware. Note that in this instance the Associated Additional Sense Code and Associated Additional Sense Code Qualifier fields are undefined.	41
0328450A	The disk device reported standard SCSI Sense Data.	51
03324002	SCSI bus selection timeout.	Passthrough
03330002	Device power on reset.	Passthrough
03344002	Target assertion of REQ after WAIT DISCONNECT.	Passthrough
03354002	During device initialization a Test Unit Ready command or a Read Capacity command to the device failed.	Passthrough
03364002	During device initialization the device reported a deferred error.	Passthrough
03374002	During device initialization the maximum number of errors for a data transfer operation was exceeded.	Passthrough
03384002	Request Sense command to the device failed.	Passthrough
03394002	Command timeout.	Passthrough
033A4002	Disconnect timeout.	Passthrough
033B4002	Unexpected bus phase.	Passthrough
033C4002	The device unexpectedly disconnected from the SCSI bus.	Passthrough
033D4002	Unexpected message.	Passthrough
033E4002	Message Reject received on a valid message.	Passthrough
033F0101	No command control structures available for passthrough device operation.	Passthrough
03402002	Device port SCSI chip reported gross error.	Passthrough
03410101	Miscellaneous SCSI Port Driver coding error.	Passthrough
03420101	A passthrough device related internal error code was reported which is not recognized by the Fault Management firmware.	Passthrough

Table 5–1 Instance Codes (Continued)

Instance Code	Description	Template
03BE0701	The EMU for the cabinet indicated by the Associated Port field has powered down the cabinet because there are less than four working power supplies present. Note that in this instance the Associated Target, Associated Additional Sense Code, and Associated Additional Sense Code Qualifier fields are undefined.	41
03BF0D01	The EMU for the cabinet indicated by the Associated Port field has powered down the cab because the temperature has reached its allowable maximum. Note that in this instance the Associated Target, Associated Additional Sense Code, and Associated Additional Sense Code Qualifier fields are undefined.	41
03C00601	The EMU for the cabinet indicated by the Associated Port field has powered down the cabinet because a fan has been missing for more than eight minutes. Note that in this instance the Associated Target, Associated Additional Sense Code, and Associated Additional Sense Code Qualifier fields are undefined.	41
03C10F64	The EMU for the cabinet indicated by the Associated Port field has allowed the cab to receive power because the number of power supplies is greater or equal to four. Note that in this instance the Associated Target, Associated Additional Sense Code, and Associated Additional Sense Code Qualifier fields are undefined.	41
03C20F64	The EMU for the cabinet indicated by the Associated Port field has allowed the cab to receive power because the high temperature problem has been fixed. Note that in this instance the Associated Target, Associated Additional Sense Code, and Associated Additional Sense Code Qualifier fields are undefined.	41

Table 5–1 Instance Codes (Continued)

Instance Code	Description	Template
03C30F64	The EMU for the cabinet indicated by the Associated Port field has allowed the cab to receive power because the fan that was missing has been replaced. Note that in this instance the Associated Target, Associated Additional Sense Code, and Associated Additional Sense Code Qualifier fields are undefined.	41
03434002	During device initialization the device reported unexpected standard SCSI Sense Data.	Passthrough
03C80101	No command control structures available for operation to a device which is unknown to the controller. Note that in this instance the Associated Additional Sense Code and Associated Additional Sense Code Qualifier fields are undefined.	41
03C92002	SCSI interface chip command timeout during operation to a device which is unknown to the controller. Note that in this instance the Associated Additional Sense Code and Associated Additional Sense Code Qualifier fields are undefined.	41
03CA4002	Byte transfer timeout during operation to a device which is unknown to the controller. Note that in this instance the Associated Additional Sense Code and Associated Additional Sense Code Qualifier fields are undefined.	41
03CB0101	Miscellaneous SCSI Port Driver coding error detected during operation to a device which is unknown to the controller. Note that in this instance the Associated Additional Sense Code and Associated Additional Sense Code Qualifier fields are undefined.	41
03CC0101	An error code was reported which was unknown to the Fault Management software. Note that in this instance the Associated Additional Sense Code and Associated Additional Sense Code Qualifier fields are undefined.	41

Table 5–1 Instance Codes (Continued)

Instance Code	Description	Template
03CD2002	Device port SCSI chip reported gross error during operation to a device which is unknown to the controller. Note that in this instance the Associated Additional Sense Code and Associated Additional Sense Code Qualifier fields are undefined.	41
03CE2002	Non-SCSI bus parity error during operation to a device which is unknown to the controller. Note that in this instance the Associated Additional Sense Code and Associated Additional Sense Code Qualifier fields are undefined.	41
03CF0101	Source driver programming error encountered during operation to a device which is unknown to the controller. Note that in this instance the Associated Additional Sense Code and Associated Additional Sense Code Qualifier fields are undefined.	41
03D04002	A failure occurred while attempting a SCSI Test Unit Ready or Read Capacity command to a device. The device type is unknown to the controller. Note that in this instance the Associated Additional Sense Code and Associated Additional Sense Code Qualifier fields are undefined.	41
03D14002	The identification of a device does not match the configuration information. The actual device type is unknown to the controller. Note that in this instance the Associated Additional Sense Code, and Associated Additional Sense Code Qualifier fields are undefined.	41
03D24402	SCSI bus errors during device operation. The device type is unknown to the controller. Note that in this instance the Associated Additional Sense Code and Associated Additional Sense Code Qualifier fields are undefined.	41

Table 5–1 Instance Codes (Continued)

Instance Code	Description	Template
03D3450A	During device initialization, the device reported the SCSI Sense Key NO SENSE. This indicates that there is no specific sense key information to be reported for the designated logical unit. This would be the case for a successful command or a command that received CHECK CONDITION or COMMAND TERMINATED status because one of the FM, EOM, or ILI bits is set to one in the sense data flags field.	41
03D4450A	During device initialization, the device reported the SCSI Sense Key RECOVERED ERROR. This indicates the last command completed successfully with some recovery action performed by the target.	41
03D5450A	During device initialization, the device reported the SCSI Sense Key NOT READY. This indicates that the logical unit addressed cannot be accessed. Operator intervention may be required to correct this condition.	41
03D6450A	During device initialization, the device reported the SCSI Sense Key MEDIUM ERROR. This indicates that the command terminated with a non-recovered error condition that was probably caused by a flaw in the medium or an error in the recorded data. This sense key may also be returned if the target is unable to distinguish between a flaw in the medium and a specific hardware failure (HARDWARE ERROR sense key).	41
03D7450A	During device initialization, the device reported the SCSI Sense Key HARDWARE ERROR. This indicates that the target detected a non-recoverable hardware failure (for example, controller failure, device failure, parity error, etc.) while performing the command or during a self test.	41

Table 5–1 Instance Codes (Continued)

Instance Code	Description	Template
03D8450A	During device initialization, the device reported the SCSI Sense Key ILLEGAL REQUEST. Indicates that there was an illegal parameter in the command descriptor block or in the additional parameters supplied as data for some commands (FORMAT UNIT, SEARCH DATA, etc.). If the target detects an invalid parameter in the command descriptor block, then it shall terminate the command without altering the medium. If the target detects an invalid parameter in the additional parameters supplied as data, then the target may have already altered the medium. This sense key may also indicate that an invalid IDENTIFY message was received.	41
03D9450A	During device initialization, the device reported the SCSI Sense Key UNIT ATTENTION. This indicates that the removable medium may have been changed or the target has been reset.	41
03DA450A	During device initialization, the device reported the SCSI Sense Key DATA PROTECT. This indicates that a command that reads or writes the medium was attempted on a block that is protected from this operation. The read or write operation is not performed.	41
03DB450A	During device initialization, the device reported the SCSI Sense Key BLANK CHECK. This indicates that a write-once device encountered blank medium or format-defined end-of-data indication while reading or a write-once device encountered a non-blank medium while writing.	41
03DC450A	During device initialization, the device reported a SCSI Vendor Specific Sense Key. This sense key is available for reporting vendor specific conditions.	41
03DD450A	During device initialization, the device reported the SCSI Sense Key COPY ABORTED. This indicates a COPY, COMPARE, or COPY AND VERIFY command was aborted due to an error condition on the source device, the destination device, or both.	41

Table 5–1 Instance Codes (Continued)

Instance Code	Description	Template
03DE450A	**During device initialization, the device reported the SCSI Sense Key ABORTED COMMAND. This indicates the target aborted the command. The initiator may be able to recover by trying the command again.**	41
03DF450A	**During device initialization, the device reported the SCSI Sense Key EQUAL. This indicates a SEARCH DATA command has satisfied an equal comparison.**	41
03E0450A	**During device initialization, the device reported the SCSI Sense Key VOLUME OVERFLOW. This indicates a buffered peripheral device has reached the end-of-partition and data may remain in the buffer that has not been written to the medium. A RECOVER BUFFERED DATA command(s) may be issued to read the unwritten data from the buffer.**	41
03E1450A	**During device initialization, the device reported the SCSI Sense Key MISCOMPARE. This indicates the source data did not match the data read from the medium.**	41
03E2450A	**During device initialization, the device reported a reserved SCSI Sense Key.**	41
03E40F64	**The EMU has indicated that Termination Power is good on all ports.** **NOTE:** In this instance the Associated Target, Associated Additional Sense Code, and Associated Additional Sense Code Qualifier fields are undefined.	41
03E58002	**The EMU has detected bad Termination Power on the indicated port.** **NOTE:** In this instance the Associated Target, Associated Additional Sense Code, and Associated Additional Sense Code Qualifier fields are undefined.	41
03EE0064	**The EMU for the cabinet indicated by the Associated Port field has become available.** **NOTE:** The Associated Target, Associated Additional Sense Code, and the Associated Additional Sense Code Qualifier fields are undefined.	41

Table 5–1 Instance Codes (Continued)

Instance Code	Description	Template
03EF8301	**The EMU for the cabinet indicated by the Associated Port field has become unavailable.** **NOTE:** The Associated Target, Associated Additional Sense Code, and the Associated Additional Sense Code Qualifier fields are undefined.	**41**
03F10502	**The SWAP interrupt from the device port indicated by the Associated Port field can not be cleared. All SWAP interrupts from all ports will be disabled until corrective action is taken. When SWAP interrupts are disabled, both controller front panel button presses and removal/insertion of devices are not detected by the controller.** **NOTE:** In this instance the Associated Target, Associated Additional Sense Code, and Associated Additional Sense Code Qualifier fields are undefined.	**41**
03F20064	**The SWAP interrupts have been cleared and re-enabled for all device ports.** **NOTE:** In this instance the Associated Port, Associated Target, Associated Additional Sense Code, and Associated Additional Sense Code Qualifier fields are undefined.	**41**
03F30064	**An asynchronous SWAP interrupt was detected by the controller for the device port indicated by the Associated Port field. Possible reasons for this occurrence include:** ■ **device insertion or removal** ■ **shelf power failure** ■ **SWAP interrupts reenabled** **NOTE:** In this instance the Associated Target, Associated Additional Sense Code, and Associated Additional Sense Code Qualifier fields are undefined.	**41**
03F40064	**Device services had to reset the port to clear a bad condition.** **NOTE:** In this instance the Associated Target, Associated Additional Sense Code, and Associated Additional Sense Code Qualifier fields are undefined.	**41**

Table 5–1 Instance Codes (Continued)

Instance Code	Description	Template
03F60402	**The controller shelf is reporting a problem. This could mean one or both of the following:** ■ **If the shelf is using dual power supplies, one power supply has failed.** ■ **One of the shelf cooling fans has failed.** **NOTE:** In this instance the Associated Target, Associated Additional Sense Code, and Associated Additional Sense Code Qualifier fields are undefined.	**41**
03F70401	**The shelf indicated by the Associated Port field is reporting a problem. This could mean one or both of the following:** ■ **If the shelf is using dual power supplies, one power supply has failed.** ■ **One of the shelf cooling fans has failed.** **NOTE:** In this instance the Associated Target, Associated Additional Sense Code, and Associated Additional Sense Code Qualifier fields are undefined.	**41**
03F80701	**The EMU has detected one or more bad power supplies.** **NOTE:** In this instance the Associated Target, Associated Additional Sense Code, and Associated Additional Sense Code Qualifier fields are undefined.	**41**
03F90601	**The EMU has detected one or more bad fans.** **NOTE:** In this instance the Associated Target, Associated Additional Sense Code, and Associated Additional Sense Code Qualifier fields are undefined.	**41**
03FA0D01	**The EMU has detected an elevated temperature condition.** **NOTE:** In this instance the Associated Target, Associated Additional Sense Code, and Associated Additional Sense Code Qualifier fields are undefined.	**41**
03FB0E01	**The EMU has detected an external air sense fault.** **NOTE:** In this instance the Associated Target, Associated Additional Sense Code, and Associated Additional Sense Code Qualifier fields are undefined.	**41**

Table 5–1 Instance Codes (Continued)

Instance Code	Description	Template
03FC0F01	**The EMU-detected power supply fault is now fixed.** **NOTE:** In this instance the Associated Target, Associated Additional Sense Code, and Associated Additional Sense Code Qualifier fields are undefined.	**41**
03FD0F01	**The EMU-detected bad-fan fault is now fixed. Note that in this instance the Associated Target, Associated Additional Sense Code, and Associated Additional Sense Code Qualifier fields are undefined.**	**41**
03FE0F01	**The EMU-detected elevated temperature fault is now fixed. Note that in this instance the Associated Target, Associated Additional Sense Code, and Associated Additional Sense Code Qualifier fields are undefined.**	**41**
03FF0F01	**The EMU-detected external air sense fault is now fixed. Note that in this instance the Associated Target, Associated Additional Sense Code, and Associated Additional Sense Code Qualifier fields are undefined.**	**41**
07030B0A	**Failover Control detected a receive packet sequence number mismatch. The controllers are out of synchronization with each other and are unable to communicate. Note that in this instance the Last Failure Code and Last Failure Parameters fields are undefined.**	**05**
07040B0A	**Failover Control detected a transmit packet sequence number mismatch. The controllers are out of synchronization with each other and are unable to communicate. Note that in this instance the Last Failure Code and Last Failure Parameters fields are undefined.**	**05**
07050064	**Failover Control received a Last Gasp message from the other controller. The other controller is expected to restart itself within a given time period. If it does not, it will be held reset with the “Kill” line.**	**05**
07060C01	**Failover Control detected that both controllers are acting as SCSI ID 6. Since ids are determined by hardware, it is unknown which controller is the real SCSI ID 6. Note that in this instance the Last Failure Code and Last Failure Parameters fields are undefined.**	**05**

Table 5–1 Instance Codes (Continued)

Instance Code	Description	Template
07070C01	Failover Control detected that both controllers are acting as SCSI ID 7. Since ids are determined by hardware, it is unknown which controller is the real SCSI ID 7. Note that in this instance the Last Failure Code and Last Failure Parameters fields are undefined.	05
07080B0A	Failover Control was unable to send keepalive communication to the other controller. It is assumed that the other controller is hung or not started. Note that in this instance the Last Failure Code and Last Failure Parameters fields are undefined.	05
0C00370A	Memory System Error Analysis is indicated in the information preserved during a previous last failure but no error conditions are indicated in the available Memory Controller registers. The Quadrant 0 Memory Controller (CACHEA0) registers content is supplied.	14
0C103E02	The Quadrant 0 Memory Controller (CACHEA0) detected an Address Parity error.	14
0C113E02	The Quadrant 1 Memory Controller (CACHEA1) detected an Address Parity error.	14
0C123E02	The Quadrant 2 Memory Controller (CACHEB0) detected an Address Parity error.	14
0C133E02	The Quadrant 3 Memory Controller (CACHEB1) detected an Address Parity error.	14
0C203E02	The Quadrant 0 Memory Controller (CACHEA0) detected a Data Parity error.	14
0C213E02	The Quadrant 1 Memory Controller (CACHEA1) detected a Data Parity error.	14
0C223E02	The Quadrant 2 Memory Controller (CACHEB0) detected a Data Parity error.	14
0C233E02	The Quadrant 3 Memory Controller (CACHEB1) detected a Data Parity error.	14
0C303F02	The Quadrant 0 Memory Controller (CACHEA0) detected a Multibit ECC error.	14
0C313F02	The Quadrant 1 Memory Controller (CACHEA1) detected a Multibit ECC error.	14

Table 5–1 Instance Codes (Continued)

Instance Code	Description	Template
0C323F02	The Quadrant 2 Memory Controller (CACHEB0) detected a Multibit ECC error.	14
0C333F02	The Quadrant 3 Memory Controller (CACHEB1) detected a Multibit ECC error.	14
0C403E02	The Quadrant 0 Memory Controller (CACHEA0) detected a Firewall error.	14
0C413E02	The Quadrant 1 Memory Controller (CACHEA1) detected a Firewall error.	14
0C423E02	The Quadrant 2 Memory Controller (CACHEB0) detected a Firewall error.	14
0C433E02	The Quadrant 3 Memory Controller (CACHEB1) detected a Firewall error.	14
0E010064	A remote copy set has been created specified by the Remote Copy Set Name field. The initiator unit of the Remote Copy Set is specified by the Initiator WWLID field.	90
0E020064	The remote copy set specified by the Remote Copy Set Name field has been deleted by the operator.	90
0E030064	The logical unit specified by the Target WWLID has transitioned from the normalizing or copying state to the normal state.	90
0E050064	The logical unit specified by the Target WWLID has been added to the remote copy set specified by the Remote Copy Set Name field. The new target member is now in the normalizing state.	90
0E068A01	The logical unit specified by the Target WWLID has been removed from the remote copy set specified by the Remote Copy Set Name field.	90
0E078A01	The logical unit specified by the Target WWLID has been removed from the remote copy set specified by the Remote Copy Set Name field. The target was removed by the operator.	90
0E088864	The remote copy set specified by the Remote Copy Set Name field has just had a membership change such that disaster tolerance failsafe error mode can now be enabled if desired.	90
0E098901	The remote copy set specified by the Remote Copy Set Name field has gone inoperative due to a disaster tolerance failsafe locked condition.	90

Table 5–1 Instance Codes (Continued)

Instance Code	Description	Template
0E0A8D01	The unit is not made available to the host for the remote copy set specified in the Remote Copy Set Name field. This controller cannot verify a site failover did not occur; hence, it is not safe to present the WWLID.	90
0E0B8E01	The unit is not made available to the host for the remote copy set specified in the Remote Copy Set Name field. This controller discovered a site failover occurred; hence, it cannot present the WWLID.	90
0E0C8C01	The copy was terminated due to a read failure on the initiator unit. The initiator unit is specified by the Initiator WWLID field.	90
0E0E8B01	The copy was terminated due to a write failure on the target unit. The initiator unit is specified by the Initiator WWLID field.	90
43010064	Host Port Protocol component has detected that the other controller has failed and that this controller has taken over the units specified in the extended sense data.	05
43020064	Host Port Protocol component has detected that this controller has taken over (failed back) the units specified in the extended sense data.	05
82042002	A spurious interrupt was detected during the execution of a Subsystem Built-In Self Test.	13
82052002	An unrecoverable error was detected during execution of the HOST PORT Subsystem Test. The system will not be able to communicate with the host.	13
82062002	An unrecoverable error was detected during execution of the UART/DUART Subsystem Test. This will cause the console to be unusable. This will cause failover communications to fail.	13

Table 5–1 Instance Codes (Continued)

Instance Code	Description	Template
82072002	An unrecoverable error was detected during execution of the FX Subsystem Test.	13
820A2002	An unrecoverable error was detected during execution of the PCI9060ES Test.	13
820B2002	An unrecoverable error was detected during execution of the Device Port Subsystem Built-In Self Test. One or more of the device ports on the controller module has failed; some/all of the attached storage is no longer accessible via this controller.	13

Last Failure Codes

A Last Failure Code is a number that uniquely-describes an unrecoverable condition. It is found at byte offset 104 to 107 and will only appear in Figure 5–2, “Template 01—Last Failure Event Sense Data Response Format” on page 5–4, and Figure 5–4, “Template 05—Failover Event Sense Data Response Format” on page 5–8.

Last Failure Code Structure

Figure 5–14 shows the structure of a Last Failure Code. If you understand its structure, you will be able to translate it, bypassing the FMU.

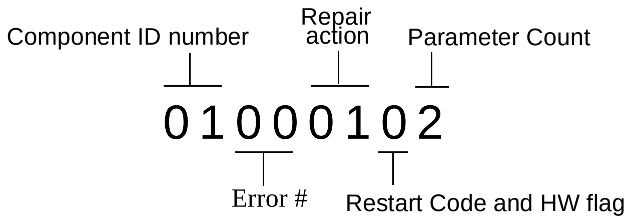

Figure 5–14. Structure of a Last Failure Code

Last Failure Codes and FMU

The format of an Last Failure Code is shown in Figure 5–15.

off \ bit	7	6	5	4	3	2	1	0
104	HW	Restart Code			Parameter Code			
105	Repair Action							
106	Error Number							
107	Component ID							

CXO6469A

Figure 5–15. Last Failure Code Format

NOTE: Do not confuse the Last Failure Code with the Instance Code (see page 5–22). They appear at different byte offsets and convey different information.

HW

This hardware/software flag is located at byte offset 104, bit 7. If this flag is equal to 1, the unrecoverable condition is due to a hardware-detected fault. If this flag is equal to 0, the unrecoverable condition is due to an inconsistency with the software, or an intentional restart or shutdown of the controller was requested.

Restart Code

Located at byte offset 104, bits 4-6, the Restart Code describes the actions taken to restart the controller after the unrecoverable condition was detected. Table 5–2 gives a description of restart codes and their descriptions.

Table 5–2 Controller Restart Codes

Restart Code	Description
0	Full software restart
1	No restart
2	Automatic hardware restart

Parameter Count

The Parameter Count, located at byte offset 104, bits 0-3, indicates the number of Last Failure Parameters containing supplemental information supplied.

Repair Action

The Repair Action found at byte offset 105 indicates the recommended repair action code assigned to the event. This value is used during Symptom-Directed Diagnosis procedures to determine what notification/recovery action should be taken. For more details, see “Recommended Repair Action Codes,” page 5–102.

Error Numbers

Located at byte offset 106, the Error Number, when combined with the value contained in the Component ID field, uniquely-identifies the condition detected.

Component IDs

A component ID uniquely identifies the software component that detected the event and is found at byte offset {11}35 (see “Component Identifier Codes,” page 5–109). Table 5–3 contains the last failure codes that can be issued by the controller’s fault-management software

Table 5–3 Last Failure Codes

Code	Description
01000100	Memory allocation failure during executive initialization.
01010100	An interrupt without any handler was triggered.
01020100	Entry on timer queue was not of type AQ or BQ.
01030100	Memory allocation for a facility lock failed.
01040100	Memory initialization called with invalid memory type.
01082004	The core diagnostics reported a fault. ■ Last Failure Parameter[0] contains the error code value (same as blinking OCP LEDs error code). ■ Last Failure Parameter[1] contains the address of the fault. ■ Last Failure Parameter[2] contains the actual data value. ■ Last Failure Parameter[3] contains the expected data value.

Table 5–3 Last Failure Codes (Continued)

Code	Description
01090105	An NMI occurred during EXEC$BUGCHECK processing. ■ Last Failure Parameter[0] contains the executive flags value. ■ Last Failure Parameter[1] contains the RIP from the NMI stack. ■ Last Failure Parameter[2] contains the read diagnostic register 0 value. ■ Last Failure Parameter[3] contains the FX Chip CSR value. ■ Last Failure Parameter[4] contains the SIP last failure code value
010D0110	The System Information structure within the System Information Page has been reset to default settings. The only known cause for this event is an I960 processor hang caused by a reference to a memory region that is not implemented. When such a hang occurs, controller modules equipped with inactivity watchdog timer circuitry will spontaneously reboot after the watchdog timer expires (within seconds of the hang). Controller modules not so equipped will just hang as indicated by the green LED on the OCP remaining in a steady state.
010E0110	All structures contained in the System Information Page (SIP) and the Last Failure entries have been reset to their default settings. This is a normal occurrence for the first boot following manufacture of the controller module and during the transition from one software version to another if and only if the format of the SIP is different between the two versions. If this event is reported at any other time, follow the recommended repair action associated with this Last Failure code.
010F0110	All structures contained in the System Information Page and the Last Failure entries have been reset to their default settings as the result of certain controller manufacturing configuration activities. If this event is reported at any other time, follow the recommended repair action associated with this Last Failure code.
01100100	Non-maskable interrupt entered but no Non-maskable interrupt pending. This is typically caused by an indirect call to address 0.

Table 5–3 Last Failure Codes (Continued)

Code	Description
01110106	A bugcheck occurred during EXEC$BUGCHECK processing. ■ Last Failure Parameter [0] contains the executive flags value. ■ Last Failure Parameter [1] contains the RIP from the bugcheck call stack. ■ Last Failure Parameter [2] contains the first SIP last failure parameter value. ■ Last Failure Parameter [3] contains the second SIP last failure parameter value. ■ Last Failure Parameter [4] contains the SIP last failure code value. ■ Last Failure Parameter [5] contains the EXEC$BUGCHECK call last failure code value.
01150106	A bugcheck occurred before subsystem initialization completed. ■ Last Failure Parameter [0] contains the executive flags value. ■ Last Failure Parameter [1] contains the RIP from the bugcheck call stack. ■ Last Failure Parameter [2] contains the first SIP last failure parameter value. ■ Last Failure Parameter [3] contains the second SIP last failure parameter value. ■ Last Failure Parameter [4] contains the SIP last failure code value. ■ Last Failure Parameter [5] contains the EXEC$BUGCHECK call last failure code value.
01160108	The I960 reported a machine fault (parity error). ■ Last Failure Parameter [0] contains the RESERVED value. ■ Last Failure Parameter [1] contains the access type value. ■ Last Failure Parameter [2] contains the access address value. ■ Last Failure Parameter [3] contains the number of faults value. ■ Last Failure Parameter [4] contains the PC value. ■ Last Failure Parameter [5] contains the AC value. ■ Last Failure Parameter [6] contains the fault type and subtype values. ■ Last Failure Parameter [7] contains the RIP value.

Table 5–3 Last Failure Codes (Continued)

Code	Description
01170108	The I960 reported a machine fault (parity error) while an NMI was being processed. ■ Last Failure Parameter [0] contains the RESERVED value. ■ Last Failure Parameter [1] contains the access type value. ■ Last Failure Parameter [2] contains the access address value. ■ Last Failure Parameter [3] contains the number of faults value. ■ Last Failure Parameter [4] contains the PC value. ■ Last Failure Parameter [5] contains the AC value. ■ Last Failure Parameter [6] contains the fault type and subtype values. ■ Last Failure Parameter [7] contains the RIP value.
01180105	A machine fault (parity error) occurred during EXEC$BUGCHECK processing. ■ Last Failure Parameter [0] contains the executive flags value. ■ Last Failure Parameter [1] contains the RIP from the machine fault stack. ■ Last Failure Parameter [2] contains the read diagnostic register 0 value. ■ Last Failure Parameter [3] contains the FX Chip CSR value. ■ Last Failure Parameter [4] contains the SIP last failure code value.
011B0108	The I960 reported a machine fault (nonparity error). ■ Last Failure Parameter [0] contains the Fault Data (2) value. ■ Last Failure Parameter [1] contains the Fault Data (1) value. ■ Last Failure Parameter [2] contains the Fault Data (0) value. ■ Last Failure Parameter [3] contains the Number of Faults value. ■ Last Failure Parameter [4] contains the PC value. ■ Last Failure Parameter [5] contains the AC value. ■ Last Failure Parameter [6] contains the Fault Flags, Type and Subtype values. ■ Last Failure Parameter [7] contains the RIP value (actual).

Table 5–3 Last Failure Codes (Continued)

Code	Description
011C0011	Controller execution terminated via display of solid fault code in OCP LEDs. Note that upon receipt of this Last Failure in a last gasp message the other controller in a dual controller configuration will inhibit assertion of the KILL line. ■ Last Failure Parameter [0] contains the OCP LED solid fault code value.
011D0100	Relocated zero (for example, C0000000) entered cia call or branch.
018000A0	A powerfail interrupt occurred.
018600A0	A processor interrupt was generated with an indication that the other controller in a dual controller configuration asserted the KILL line to disable this controller.
018700A0	A processor interrupt was generated with an indication that the (//) RESET button on the controller module was depressed.
018800A0	A processor interrupt was generated with an indication that the program card was removed.
018900A0	A processor interrupt was generated with an indication that the controller inactivity watch dog timer expired.
018E2582	A NMI interrupt was generated with an indication that a memory system problem occurred. ■ Last Failure Parameter [0] contains the memory controller register address which encountered the error. ■ Last Failure Parameter [1] contains the memory controller's Command Status Register value.
018F2087	A NMI interrupt was generated with an indication that a controller system problem occurred. ■ Last Failure Parameter [0] contains the value of read diagnostic register 0. ■ Last Failure Parameter [1] contains the value of read diagnostic register 1. ■ Last Failure Parameter [2] contains PCI status. Bits 31::24 hold PCFX PSCR status and bits 15::08 hold PLX PSCR status. ■ Last Failure Parameter [3] contains the PCFX PDAL control/status register. ■ Last Failure Parameter [4] contains the IBUS address of error register. ■ Last Failure Parameter [5] contains the previous PDAL address of error register. ■ Last Failure Parameter [6] contains the current PDAL address of error register.

Table 5–3 Last Failure Codes (Continued)

Code	Description
01902080	The PCI bus on the controller will not allow a master to initiate a transfer. Unable to provide further diagnosis of the problem.
01902086	The PCI bus on the controller will not allow a master to initiate a transfer. Unable to provide further diagnosis of the problem. ■ Last Failure Parameter [0] contains the value of read diagnostic register 0. ■ Last Failure Parameter [1] contains the value of read diagnostic register 1. ■ Last Failure Parameter [2] contains the value of read diagnostic register 2. ■ Last Failure Parameter [3] contains the value of write diagnostic register 0. ■ Last Failure Parameter [4] contains the value of write diagnostic register 1. ■ Last Failure Parameter [5] contains the IBUS address of error register.
01910084	A Cache Module was inserted or removed. ■ Last Failure Parameter [0] contains the value of actual Cache Module A exists state. ■ Last Failure Parameter [1] contains the value of actual Cache Module B exists state. ■ Last Failure Parameter [2] contains the value of expected Cache Module A exists state. ■ Last Failure Parameter [3] contains the value of expected Cache Module B exists state.
01920186	Unable to read the FX because a Device Port or a Host Port locked the PDAL bus. ■ Last Failure Parameter [0] contains the value of read diagnostic register 0. ■ Last Failure Parameter [1] contains the value of read diagnostic register 1. ■ Last Failure Parameter [2] contains the value of read diagnostic register 2. ■ Last Failure Parameter [3] contains the value of write diagnostic register 0. ■ Last Failure Parameter [4] contains the value of write diagnostic register 1. ■ Last Failure Parameter [5] contains the IBUS address of error register.

Table 5–3 Last Failure Codes (Continued)

Code	Description
01932588	An error has occurred on the CDAL. ■ Last Failure Parameter [0] contains the value of read diagnostic register 0. ■ Last Failure Parameter [1] contains the value of read diagnostic register 1. ■ Last Failure Parameter [2] contains the value of write diagnostic register 0. ■ Last Failure Parameter [3] contains the value of write diagnostic register 1. ■ Last Failure Parameter [4] contains the IBUS address of error register. ■ Last Failure Parameter [5] contains the PCFX CDAL control / status register. ■ Last Failure Parameter [6] contains the previous CDAL address of error register. ■ Last Failure Parameter [7] contains the current CDAL address of error register.
01942088	An error has occurred on the PDAL. ■ Last Failure Parameter [0] contains the value of read diagnostic register 0. ■ Last Failure Parameter [1] contains the value of read diagnostic register 1. ■ Last Failure Parameter [2] contains the value of write diagnostic register 0. ■ Last Failure Parameter [3] contains the value of write diagnostic register 1. ■ Last Failure Parameter [4] contains the IBUS address of error register. ■ Last Failure Parameter [5] contains the PCFX PDAL control / status register. ■ Last Failure Parameter [6] contains the previous PDAL address of error register. ■ Last Failure Parameter [7] contains the current PDAL address of error register.

Table 5–3 Last Failure Codes (Continued)

Code	Description
01950188	An error has occurred that caused the FX to be rest, when not permissible. ■ Last Failure Parameter [0] contains the value of read diagnostic register 0. ■ Last Failure Parameter [1] contains the value of read diagnostic register 1. ■ Last Failure Parameter [2] contains the value of write diagnostic register 0. ■ Last Failure Parameter [3] contains the value of write diagnostic register 1. ■ Last Failure Parameter [4] contains the IBUS address of error register. ■ Last Failure Parameter [5] contains the PCFX PDAL control / status register. ■ Last Failure Parameter [6] contains the PCFX CDAL control / status register. ■ Last Failure Parameter [7] contains the current PDAL address of error register.
01960186	The Ibus is inaccessible. ■ Last Failure Parameter [0] contains the value of read diagnostic register 0. ■ Last Failure Parameter [1] contains the value of read diagnostic register 1. ■ Last Failure Parameter [2] contains the value of read diagnostic register 2. ■ Last Failure Parameter [3] contains the value of write diagnostic register 0. ■ Last Failure Parameter [4] contains the value of write diagnostic register 1. ■ Last Failure Parameter [5] contains the IBUS address of error register.
01970188	Software indicates all NMI causes cleared, but some remain. ■ Last Failure Parameter [0] contains the value of read diagnostic register 0. ■ Last Failure Parameter [1] contains the value of read diagnostic register 1. ■ Last Failure Parameter [2] contains the value of read diagnostic register 2. ■ Last Failure Parameter [3] contains the value of write diagnostic register 0. ■ Last Failure Parameter [4] contains the value of write diagnostic register 1. ■ Last Failure Parameter [5] contains the IBUS address of error register. ■ Last Failure Parameter [6] contains the PCFX PDAL control / status register. ■ Last Failure Parameter [7] contains the PCFX CDAL control / status register.

Table 5–3 Last Failure Codes (Continued)

Code	Description
01982087	The Ibus encountered a parity error. ■ Last Failure Parameter [0] contains the value of read diagnostic register 0. ■ Last Failure Parameter [1] contains the value of read diagnostic register 1. ■ Last Failure Parameter [2] contains the value of read diagnostic register 2. ■ Last Failure Parameter [3] contains the value of write diagnostic register 0. ■ Last Failure Parameter [4] contains the value of write diagnostic register 1. ■ Last Failure Parameter [5] contains the IBUS address of error register. ■ Last Failure Parameter [6] contains the RIP.
01992088	An error was detected by the PLX. ■ Last Failure Parameter [0] contains the value of read diagnostic register 0. ■ Last Failure Parameter [1] contains the value of read diagnostic register 1. ■ Last Failure Parameter [2] contains the value of write diagnostic register 0. ■ Last Failure Parameter [3] contains the value of write diagnostic register 1. ■ Last Failure Parameter [4] contains the IBUS address of error register. ■ Last Failure Parameter [5] contains the PLX status register. ■ Last Failure Parameter [6] contains the previous PDAL address of error register. ■ Last Failure Parameter [7] contains the RIP.
02010100	Initialization code was unable to allocate enough memory to set up the send data descriptors.
02040100	Unable to allocate memory necessary for data buffers.
02050100	Unable to allocate memory for the Free Buffer Array.
02080100	A call to EXEC$ALLOCATE_MEM_ZEROED failed to return memory when populating the disk read DWD stack.
02090100	A call to EXEC$ALLOCATE_MEM_ZEROED failed to return memory when populating the disk write DWD stack.

Table 5–3 Last Failure Codes (Continued)

Code	Description
020C0100	**A call to EXEC$ALLOCATE_MEM_ZEROED failed to return memory when populating the miscellaneous DWD stack.**
02100100	**A call to EXEC$ALLOCATE_MEM_ZEROED failed to return memory when creating the device services state table.**
02170100	**Unable to allocate memory for the Free Node Array.**
021D0100	**Unable to allocate memory for the Free Buffer Array.**
021F0100	**Unable to allocate memory for WARPs and RMDs.**
02210100	**Invalid parameters in CACHE$OFFER_META call.**
02220100	**No buffer found for CACHE$MARK_META_DIRTY call.**
02270104	**A callback from DS on a transfer request has returned a bad or illegal DWD status.** ■ **Last Failure Parameter [0] contains the DWD Status.** ■ **Last Failure Parameter [1] contains the DWD address.** ■ **Last Failure Parameter [2] contains the PUB address.** ■ **Last Failure Parameter [3] contains the Device Port**
022C0100	**A READ_LONG operation was requested for a Local Buffer Transfer. READ_LONG is not supported for Local Buffer Transfers.**
022D0100	**A WRITE_LONG operation was requested for a Local Buffer Transfer. WRTE_LONG is not supported for Local Buffer Transfers.**
02380102	**An invalid status was returned from CACHE$LOCK_READ().** ■ **Last Failure Parameter [0] contains the DD address.** ■ **Last Failure Parameter [1] contains the invalid status.**

Table 5–3 Last Failure Codes (Continued)

Code	Description
023A2084	A processor interrupt was generated by the controller's XOR engine (FX), indicating an unrecoverable error condition. ■ Last Failure Parameter [0] contains the FX Control and Status Register (CSR). ■ Last Failure Parameter [1] contains the FX DMA Indirect List Pointer register (DILP). ■ Last Failure Parameter [2] contains the FX DMA Page Address register (DADDR). ■ Last Failure Parameter [3] contains the FX DMA Command and control register (DCMD).
02440100	The logical unit mapping type was detected invalid in va_set_disk_geometry()
02530102	An invalid status was returned from CACHE$LOOKUP_LOCK(). ■ Last Failure Parameter[0] contains the DD address. ■ Last Failure Parameter[1] contains the invalid status.
02560102	An invalid status was returned from CACHE$LOOKUP_LOCK(). ■ Last Failure Parameter[0] contains the DD address. ■ Last Failure Parameter[1] contains the invalid status.
02570102	An invalid status was returned from VA$XFER() during an operation. ■ Last Failure Parameter[0] contains the DD address. ■ Last Failure Parameter[1] contains the invalid status.
025A0102	An invalid status was returned from CACHE$LOOKUP_LOCK(). ■ Last Failure Parameter[0] contains the DD address. ■ Last Failure Parameter[1] contains the invalid status.
02690102	An invalid status was returned from CACHE$OFFER_WRITE_DATA(). ■ Last Failure Parameter[0] contains the DD address. ■ Last Failure Parameter[1] contains the invalid status.
027B0102	An invalid status was returned from VA$XFER() in a complex ACCESS operation. ■ Last Failure Parameter[0] contains the DD address. ■ Last Failure Parameter[1] contains the invalid status.
027D0100	Unable to allocate memory for a Failover Control Block.

Table 5–3 Last Failure Codes (Continued)

Code	Description
027E0100	Unable to allocate memory for a Failover Control Block.
027F0100	Unable to allocate memory for a Failover Control Block.
02800100	Unable to allocate memory for a Failover Control Block.
02840100	Unable to allocate memory for the XNode Array.
02860100	Unable to allocate memory for the Fault Management Event Information Packet used by the Cache Manager in generating error logs to the host.
02880100	Invalid FOC Message in cmfoc_snd_cmd.
028A0100	Invalid return status from DIAG$CACHE_MEMORY_TEST.
028B0100	Invalid return status from DIAG$CACHE_MEMORY_TEST.
028C0100	Invalid error status given to cache_fail.
028E0100	Invalid DCA state detected in init_crashover.
02910100	Invalid metadata combination detected in build_raid_node.
02920100	Unable to handle that many bad dirty pages (exceeded MAX_BAD_DIRTY). Cache memory is bad.
02930100	There was no free or freeable buffer to convert bad metadata or to borrow a buffer during failover of bad dirty.
02940100	A free Device Correlation Array entry could not be found during write-back cache failover.
02950100	Invalid DCA state detected in start_crashover.
02960100	Invalid DCA state detected in start_failover.
02970100	Invalid DCA state detected in init_failover.
02990100	A free RAID Correlation Array entry could not be found during write-back cache failover.
029A0100	Invalid cache buffer metadata detected while scanning the Buffer Metadata Array. Found a page containing dirty data but the corresponding Device Correlation Array entry does exist.
029D0100	Invalid metadata combination detected in build_bad_raid_node.
029F0100	The Cache Manager software has insufficient resources to handle a buffer request pending.
02A00100	VA change state is trying to change device affinity and the cache has data for this device.

Table 5–3 Last Failure Codes (Continued)

Code	Description
02A10100	Pubs not one when transportable
02A20100	Pubs not one when transportable
02A30100	No available data buffers. If the cache module exists then this is true after testing the whole cache. Otherwise there were no buffers allocated from BUFFER memory on the controller module.
02A40100	A call to EXEC$ALLOCATE_MEM_ZEROED failed to return memory when allocating VAXDs.
02A50100	A call to EXEC$ALLOCATE_MEM_ZEROED failed to return memory when allocating DILPs.
02A60100	A call to EXEC$ALLOCATE_MEM_ZEROED failed to return memory when allocating Change State Work Items.
02A70100	A call to EXEC$ALLOCATE_MEM_ZEROED failed to return memory when allocating VA Request Items.
02A90100	Too many pending FOC$SEND requests by the Cache Manager. Code is not designed to handle more than one FOC$SEND to be pending because there’s no reason to expect more than one pending.
02AA0100	An invalid call was made to CACHE$DEALLOCATE_CLD. Either that device had dirty data or it was bound to a RAIDset.
02AB0100	An invalid call was made to CACHE$DEALLOCATE_SLD. A RAIDset member either had dirty data or write-back already turned on.
02AC0100	An invalid call was made to CACHE$DEALLOCATE_SLD. The RAIDset still has data (strip nodes).
02AD0180	The FX detected a compare error for data that was identical. This error has always previously occurred due to a hardware problem.
02AE0100	The mirrorset member count and individual member states are inconsistent. Discovered during a mirrorset write or erase.
02AF0102	An invalid status was returned from VA$XFER() in a write operation. ■ Last Failure Parameter[0] contains the DD address. ■ Last Failure Parameter[1] contains the invalid status.

Table 5–3 Last Failure Codes (Continued)

Code	Description
02B00102	An invalid status was returned from VA$XFER () in an erase operation. ■ Last Failure Parameter [0] contains the DD address. ■ Last Failure Parameter [1] contains the invalid status.
02B10100	A mirrorset read operation was received and the round robin selection algorithm found no normal members in the mirrorset. Internal inconsistency.
02B20102	An invalid status was returned from CACHE$LOCK_READ during a mirror copy operation. ■ Last Failure Parameter[0] contains the DD address. ■ Last Failure Parameter[1] contains the invalid status.
02B30100	CACHE$CHANGE_MIRROR_MODE invoked illegally (cache bad, dirty data still resident in the cache.)
02B90100	Invalid code loop count attempting to find the Cache ID Blocks.
02BD0100	A mirrorset metadata online operation found no normal members in the mirrorset. Internal inconsistency.
02BE0100	No free pages in the other cache. In performing mirror cache failover, a bad page was found, and an attempt was made to recover the data from the good copy (primary/mirror), but no free good page was found on the other cache to copy the data to.
02BF0100	Report_error routine encountered an unexpected failure status returned from DIAG$LOCK_AND_TEST_CACHE_B.
02C00100	Copy_buff_on_this routine expected the given page to be marked bad and it wasn’t.
02C10100	Copy_buff_on_other routine expected the given page to be marked bad and it wasn’t.
02C30100	CACHE$CREATE_MIRROR was invoked by C_SWAP under unexpected conditions (e.g., other controller not dead, bad lock state).
02C60100	Mirroring transfer found CLD with writeback state OFF.
02C70100	Bad BBR offsets for active shadowset, detected on write.
02C80100	Bad BBR offsets for active shadowset, detected on write.
02C90100	Illegal call made to CACHE$PURGE_META when the storageset was not quiesced.

Table 5–3 Last Failure Codes (Continued)

Code	Description
02CA0100	Illegal call made to VA$RAID5_META_READ when another read (of metadata) is already in progress on the same strip.
02CB0000	A restore of the configuration has been done. This cleans up and restarts with the new configuration.
02CC0100	On an attempt, which is not allowed to fail, to allocate a cache node, no freeable cache node was found.
02D00100	Not all alter_device requests from VA_SAVE_CONFIG completed within the timeout interval.
02D30100	The controller has insufficient memory to allocate enough data structures used to manage metadata operations.
02D60100	An invalid storage set type was specified for metadata initialization.
02D90100	Bad CLD pointer passed setwb routine.
02DA0100	A fatal logic error occurred while trying to restart a stalled data transfer stream.
02DB0100	A call to EXEC$ALLOCATE_MEM_ZEROED failed to return memory when populating the disk read PCX DWD stack.
02DC0100	A call to EXEC$ALLOCATE_MEM_ZEROED failed to return memory when populating the disk write PCX DWD stack.
02DD0101	The VA state change deadman timer expired, and at least one VSI was still interlocked. ■ Last Failure Parameter [0] contains the nv_index.
02DE0100	An attempt to allocate memory for a null pub failed to get the memory.
02DF0101	License identified in Last Failure Parameter [0] was not forced valid.
02E00180	Mirror functionality is broken.

Table 5–3 Last Failure Codes (Continued)

Code	Description
02E11016	While attempting to restore saved configuration information, data for two unrelated controllers was found. The restore code is unable to determine which disk contains the correct information. The Port/Target/LUN information for the two disks is contained in the parameter list. Remove the disk containing the incorrect information, reboot the controller, and issue the SET THIS_CONTROLLER INITIAL_CONFIGURATION command. When the controller reboots, the proper configuration will be loaded. ■ Last Failure Parameter [0] contains the first disk port. ■ Last Failure Parameter [1] contains the first disk target. ■ Last Failure Parameter [2] contains the first disk LUN. ■ Last Failure Parameter [3] contains the second disk port. ■ Last Failure Parameter [4] contains the second disk target. ■ Last Failure Parameter [5] contains the second disk LUN.
02E20100	An attempt to allocate a va_cs_work item from the S_va_free_cs_work_queue failed.
02E30100	An attempt to allocate a free VAR failed.
02E40100	An attempt to allocate a free VAR failed.
O2E50100	An attempt to allocate a free VAR failed.
02E60100	An attempt to allocate a free VAR failed.
02E70100	An attempt to allocate a free VAR failed.
02E80100	An attempt to allocate a free VAR failed.
02E90100	An attempt to allocate a free VAR failed.
02EA0100	An attempt to allocate a free VAR failed.
02EB0100	An attempt to allocate a free metadata WARP failed.
02EC0101	An online request was received for a unit when both controllers had dirty data for the unit. The crash is to allow the surviving controller to copy over all of the dirty data. Last Failure Parameter [0] contains the nv_index of the unit.
02ED0100	On an attempt, which is not allowed to fail, to allocate a BDB, no freeable BDB was found.

Table 5–3 Last Failure Codes (Continued)

Code	Description
02EE0102	A CLD is already allocated when it should be free. ■ Last Failure Parameter [0] contains the requesting entity. ■ Last Failure Parameter [1] contains the CLD index.
02EF0102	A CLD is free when it should be allocated. ■ Last Failure Parameter [0] contains the requesting entity. ■ Last Failure Parameter [1] contains the CLD index.
02F00100	The controller has insufficient free resources for the configuration restore process to obtain a facility lock.
02F10102	The configuration restore process encountered an unexpected non-volatile parameter store format. The process cannot restore from this version. ■ Last Failure Parameter [0] contains the version found. ■ Last Failure Parameter [1] contains the expected version.
02F20100	The controller has insufficient free resources for the configuration restore process to release a facility lock.
02F34083	A device read operation failed during the configuration restore operation. The controller is crashed to prevent possible loss of saved configuration information on other functioning devices. ■ Last Failure Parameter [0] contains the disk port. ■ Last Failure Parameter [1] contains the disk target. ■ Last failure Parameter [2] contains the disk LUN.
02F44083	The calculated error detection code on the saved configuration information is bad. The controller is crashed to prevent destruction of other copies of the saved configuration information. Remove the device with the bad information and retry the operation. ■ Last Failure Parameter [0] contains the disk port. ■ Last Failure Parameter [1] contains the disk target. ■ Last Failure Parameter [2] contains the disk LUN.

Table 5–3 Last Failure Codes (Continued)

Code	Description
02F54083	The device saved configuration information selected for the restore process is from an unsupported controller type. Remove the device with the unsupported information and retry the operation. ■ Last Failure Parameter [0] contains the disk port. ■ Last Failure Parameter [1] contains the disk target. ■ Last Failure Parameter [2] contains the disk LUN.
02F60103	An invalid modification to the no_interlock VSI flag was attempted. ■ Last Failure Parameter [0] contains the nv_index of the config on which the problem was found. ■ Last Failure Parameter [1] contains modification flag. ■ Last Failure Parameter [2] contains the current value of the no_interlock flag. If the modification flag is 1, then an attempt was being made to set the no_interlock flag, and the no_interlock flag was not clear at the time. If the modification flag is 0, then an attempt was being made to clear the no_interlock flag, and the no_interlock flag was not set (== 1) at the time.
02F70100	During boot testing, one or more device ports (SCSI) were found to be bad. Due to a problem in the SYMBIOS 770 chip, the diagnostic may occasionally fail the port even though the hardware is OKAY. A reboot should clear up the problem. If the port is actually broken, logic to detect a loop that repeatedly causes the same bugcheck will cause a halt.
02F80103	An attempt was made to bring a unit online when the cache manager says that a member CLD was not in the appropriate state. ■ Last Failure Parameter [0] contains the nv_index of the config on which the problem was found. ■ Last Failure Parameter [1] contains the map type of that config. ■ Last Failure Parameter [2] contains the value from CACHE$CHECK_CID that was not acceptable.

Table 5–3 Last Failure Codes (Continued)

Code	Description
02F90100	A call to EXEC$ALLOCATE_MEM_ZEROED failed to return memory when allocating structures for read ahead caching.
02FA0100	A read ahead caching data structure (RADD) is inconsistent.
02FB2084	A processor interrupt was generated by the controller's XOR engine (FX), indicating an unrecoverable error condition. ■ Last Failure Parameter [0] contains the FX Control and Status Register (CSR). ■ Last Failure Parameter [1] contains the FX DMA Indirect List Pointer register (DILP). ■ Last Failure Parameter [2] contains the FX DMA Page Address register (DADDR). ■ Last Failure Parameter [3] contains the FX DMA Command and control register (DCMD).
02FC0180	The FX detected a compare error for data that was identical. This error has always previously occurred due to a hardware problem.
02FD0100	The controller has insufficient free memory to restore saved configuration information from disk.
02FE0105	A field in the VSI was not cleared when an attempt was made to clear the interlock. ■ Last Failure Parameter [0] contains the NV index of the VSI on which the problem was found. ■ Last Failure Parameter [1] contains the contents of the enable_change field of the VSI, which should be zero. ■ Last Failure Parameter [2] contains the contents of the desired_state field of the VSI, which should be zero. ■ Last Failure Parameter [3] contains the contents of the completion_routine field of the VSI, which should be zero. ■ Last Failure Parameter [4] contains the contents of the open_requests field of the VSI, which should be zero.
03010100	Failed request for port-specific scripts memory allocation.
03020101	Invalid SCSI direct-access device opcode in misc command DWD. ■ Last Failure Parameter [0] contains the SCSI command opcode.

Table 5–3 Last Failure Codes (Continued)

Code	Description
03040101	Invalid SCSI CDROM device opcode in misc command DWD. ■ Last Failure Parameter [0] contains the SCSI command opcode.
03060101	Invalid SCSI device type in PUB. ■ Last Failure Parameter [0] contains the SCSI device type.
03070101	Invalid CDB Group Code detected during create of misc cmd DWD ■ Last Failure Parameter [0] contains the SCSI command opcode.
03080101	Invalid SCSI OPTICAL MEMORY device opcode in misc command DWD. ■ Last Failure Parameter [0] contains the SCSI command opcode.
03090101	Failed request for allocation of pci miscellaneous block Last Failure Parameter [0] contains the failed dwd command class.
030A0100	Error DWD not found in port in_proc_q.
030B0188	A dip error was detected when pcb_busy was set. ■ Last Failure Parameter [0] contains the PCB port_ptr value. ■ Last Failure Parameter [1] contains the new info NULL-SSTAT0-DSTAT-ISTAT. ■ Last Failure Parameter [2] contains the PCB copy of the device port DBC register. ■ Last Failure Parameter [3] contains the PCB copy of the device port DNAD register. ■ Last Failure Parameter [4] contains the PCB copy of the device port DSP register. ■ Last Failure Parameter [5] contains the PCB copy of the device port DSPS register. ■ Last Failure Parameter [6] contains the PCB copies of the device port SSTAT2/SSTAT1/SSTAT0/DSTAT registers. ■ Last Failure Parameter [7] contains the PCB copies of the device port LCRC/RESERVED/ISTAT/DFIFO registers.
031E0100	Can’t find in_error dwd on in-process queue.
031F0100	Either DWD_ptr is null or bad value in dsps.
03280100	SCSI CDB contains an invalid group code for a transfer command.

Table 5–3 Last Failure Codes (Continued)

Code	Description
03290100	The required Event Information Packet (EIP) or Device Work Descriptor (DWD) were not supplied to the Device Services error logging code.
032B0100	A Device Work Descriptor (DWD) was supplied with a NULL Physical Unit Block (PUB) pointer.
03320101	An invalid code was passed to the error recovery thread in the error_stat field of the PCB. ■ Last Failure Parameter[0] contains the PCB error_stat code.
03330188	A parity error was detected by a device port while sending data out onto the SCSI bus. ■ Last Failure Parameter [0] contains the PCB port_ptr value. ■ Last Failure Parameter [1] contains the PCB copy of the device port TEMP register. ■ Last Failure Parameter [2] contains the PCB copy of the device port DBC register. ■ Last Failure Parameter [3] contains the PCB copy of the device port DNAD register. ■ Last Failure Parameter [4] contains the PCB copy of the device port DSP register. ■ Last Failure Parameter [5] contains the PCB copy of the device port DSPS register. ■ Last Failure Parameter [6] contains the PCB copies of the device port SSTAT2/SSTAT1/SSTAT0/DSTAT registers. ■ Last Failure Parameter [7] contains the PCB copies of the device port LCRC/RESERVED/ISTAT/DFIFO registers.

Table 5–3 Last Failure Codes (Continued)

Code	Description
03350188	The TEA (bus fault) signal was asserted into a device port. ■ Last Failure Parameter [0] contains the PCB port_ptr value. ■ Last Failure Parameter [1] contains the PCB copy of the device port TEMP register. ■ Last Failure Parameter [2] contains the PCB copy of the device port DBC register. ■ Last Failure Parameter [3] contains the PCB copy of the device port DNAD register. ■ Last Failure Parameter [4] contains the PCB copy of the device port DSP register. ■ Last Failure Parameter [5] contains the PCB copy of the device port DSPS register. ■ Last Failure Parameter [6] contains the PCB copies of the device port SSTAT2/SSTAT1/SSTAT0/DSTAT registers. ■ Last Failure Parameter [7] contains the PCB copies of the device port LCRC/RESERVED/ISTAT/DFIFO registers.
03370108	A device port detected an illegal script instruction. ■ Last Failure Parameter [0] contains the PCB port_ptr value. ■ Last Failure Parameter [1] contains the PCB copy of the device port TEMP register. ■ Last Failure Parameter [2] contains the PCB copy of the device port DBC register. ■ Last Failure Parameter [3] contains the PCB copy of the device port DNAD register. ■ Last Failure Parameter [4] contains the PCB copy of the device port DSP register. ■ Last Failure Parameter [5] contains the PCB copy of the device port DSPS register. ■ Last Failure Parameter [6] contains the PCB copies of the device port SSTAT2/SSTAT1/SSTAT0/DSTAT registers. ■ Last Failure Parameter [7] contains the PCB copies of the device port LCRC/RESERVED/ISTAT/DFIFO registers.

Table 5–3 Last Failure Codes (Continued)

Code	Description
03380188	A device port's DSTAT register contains multiple asserted bits, or an invalidily asserted bit, or both. ■ Last Failure Parameter [0] contains the PCB port_ptr value. ■ Last Failure Parameter [1] contains the PCB copy of the device port TEMP register. ■ Last Failure Parameter [2] contains the PCB copy of the device port DBC register. ■ Last Failure Parameter [3] contains the PCB copy of the device port DNAD register. ■ Last Failure Parameter [4] contains the PCB copy of the device port DSP register. ■ Last Failure Parameter [5] contains the PCB copy of the device port DSPS register. ■ Last Failure Parameter [6] contains the PCB copies of the device port SSTAT2/SSTAT1/SSTAT0/DSTAT registers. ■ Last Failure Parameter [7] contains the PCB copies of the device port LCRC/RESERVED/ISTAT/DFIFO registers.
03390108	An unknown interrupt code was found in a device port's DSPS register. ■ Last Failure Parameter [0] contains the PCB port_ptr value. ■ Last Failure Parameter [1] contains the PCB copy of the device port TEMP register. ■ Last Failure Parameter [2] contains the PCB copy of the device port DBC register. ■ Last Failure Parameter [3] contains the PCB copy of the device port DNAD register. ■ Last Failure Parameter [4] contains the PCB copy of the device port DSP register. ■ Last Failure Parameter [5] contains the PCB copy of the device port DSPS register. ■ Last Failure Parameter [6] contains the PCB copies of the device port SSTAT2/SSTAT1/SSTAT0/DSTAT registers. Last Failure Parameter [7] contains the PCB copies of the device port LCRC/RESERVED/ISTAT/DFIFO registers.
033C0101	An invalid code was seen by the error recovery thread in the er_funct_step field of the PCB. ■ Last Failure Parameter [0] contains the PCB er_funct_step code.

Table 5–3 Last Failure Codes (Continued)

Code	Description
033E0108	An attempt was made to restart a device port at the SDP DBD. ■ Last Failure Parameter [0] contains the PCB port_ptr value. ■ Last Failure Parameter [1] contains the PCB copy of the device port TEMP register. ■ Last Failure Parameter [2] contains the PCB copy of the device port DBC register. ■ Last Failure Parameter [3] contains the PCB copy of the device port DNAD register. ■ Last Failure Parameter [4] contains the PCB copy of the device port DSP register. ■ Last Failure Parameter [5] contains the PCB copy of the device port DSPS register. ■ Last Failure Parameter [6] contains the PCB copies of the device port SSTAT2/SSTAT1/SSTAT0/DSTAT registers. ■ Last Failure Parameter [7] contains the PCB copies of the device port LCRC/RESERVED/ISTAT/DFIFO registers.
033F0108	An EDC error was detected on a read of a soft-sectored device path not yet implemented. ■ Last Failure Parameter [0] contains the PCB port_ptr value. ■ Last Failure Parameter [1] contains the PCB copy of the device port TEMP register. ■ Last Failure Parameter [2] contains the PCB copy of the device port DBC register. ■ Last Failure Parameter [3] contains the PCB copy of the device port DNAD register. ■ Last Failure Parameter [4] contains the PCB copy of the device port DSP register. ■ Last Failure Parameter [5] contains the PCB copy of the device port DSPS register. ■ Last Failure Parameter [6] contains the PCB copies of the device port SSTAT2/SSTAT1/SSTAT0/DSTAT registers. ■ Last Failure Parameter [7] contains the PCB copies of the device port LCRC/RESERVED/ISTAT/DFIFO registers.
03410101	Invalid SCSI device type in PUB. ■ Last Failure Parameter [0] contains the PUB SCSI device type.

Table 5–3 Last Failure Codes (Continued)

Code	Description
03450188	A Master Data Parity Error was detected by a port. ■ Last Failure Parameter [0] contains the PCB port_ptr value. ■ Last Failure Parameter [1] contains the PCB copies of the device port DCMD/DBC registers. ■ Last Failure Parameter [2] contains the PCB copy of the device port DNAD register. ■ Last Failure Parameter [3] contains the PCB copy of the device port DSP register. ■ Last Failure Parameter [4] contains the PCB copy of the device port DSPS register. ■ Last Failure Parameter [5] contains the PCB copies of the device port DSTAT/SSTAT0/SSTAT1/SSTAT2 registers. ■ Last Failure Parameter [6] contains the PCB copies of the device port DFIFO/ISTAT/SBCL/RESERVED registers. ■ Last Failure Parameter [7] contains the PCB copies of the device port SIST0/SIST1/SXFER/SCNTL3 registers.
03470100	Insufficient memory available for target block allocation.
03480100	Insufficient memory available for device port info block allocation.
03490100	Insufficient memory available for autoconfig buffer allocation.
034A0100	Insufficient memory available for PUB allocation.
034B0100	Insufficient memory available for DS init buffer allocation.
034C0100	Insufficient memory available for static structure allocation.
034D0100	DS init DWDs exhausted.
034E2080	Diagnostics report all device ports are broken.
034F0100	Insufficient memory available for reselect target block allocation.
03500100	Insufficient memory available for command disk allocation.
03520100	A failure resulted when an attempt was made to allocate a DWD for use by DS CDI.

Table 5–3 Last Failure Codes (Continued)

Code	Description
03530102	A DWD with an illegal address has been found. ■ Last Failure Parameter [0] contains the bad DWD pointer. ■ Last Failure Parameter [1] contains the corresponding PCB pointer.
035A0100	Invalid SCSI message byte passed to DS.
035B0100	Insufficient DWD resources available for SCSI message passthrough.
03640100	Processing run_switch disabled for LOGDISK associated with the other controller.
03650100	Processing pub unblock for LOGDISK associated with the other controller.
03660100	No memory available to allocate pub to tell the other controller of reset to one if its LUNs
03670100	No memory available to allocate pub to tell the other controller of a BDR to one if its LUNs
036F0101	Either send_sdtr or send_wdtr flag set in a non-miscellaneous DWD. ■ Last Failure Parameter [0] contains the invalid command class type.
03780181	In ds_get_resume_addr, the buffer address is non-longword aligned for FX access. ■ Last Failure Parameter [0] contains the re-entry dbd address value.
03790188	A PCI bus fault was detected by a device port. ■ Last Failure Parameter [0] contains the PCB port_ptr value. ■ Last Failure Parameter [1] contains the PCB copy of the device port TEMP register. ■ Last Failure Parameter [2] contains the PCB copy of the device port DBC register. ■ Last Failure Parameter [3] contains the PCB copy of the device port DNAD register. ■ Last Failure Parameter [4] contains the PCB copy of the device port DSP register. ■ Last Failure Parameter [5] contains the PCB copy of the device port DSPS register. ■ Last Failure Parameter [6] contains the PCB copies of the device port SSTAT2/SSTAT1/SSTAT0/DSTAT registers. ■ Last Failure Parameter [7] contains the PCB copies of the device port LCRC/RESERVED/ISTAT/DFIFO registers.
03820100	Failed request for mapping table memory allocation.
03830100	Failed request pci 875 block memory allocation.

Table 5–3 Last Failure Codes (Continued)

Code	Description
03850101	ds_alloc_mem called with invalid memory type Last Failure Parameter [0] contains the invalid memory type.
03860100	ds_alloc_mem was unable to get requested memory allocated: NULL pointer returned.
038C0100	Insufficient memory available for completion dwd array allocation.
03980100	Failed to allocate expandable EMU static work structures.
03990100	Failed to allocate expandable EMU work entry.
039A0100	Failed to allocate expandable EMU FOC work entry.
039B0100	EMU request work queue corrupted.
039C0100	EMU response work queue corrupted.
039D0100	EMU work queue corrupted.
039E0100	EMU foc request work queue corrupted.
039F0100	EMU foc response work queue corrupted.
03A08093	A configuration or hardware error was reported by the EMU. ■ Last Failure Parameter [0] contains the solid OCP pattern which identifies the type of problem encountered. ■ Last Failure Parameter [1] contains the cabinet ID reporting the problem. ■ Last Failure Parameter [2] contains the SCSI Port number where the problem exists (if port-specific).
03A28193	The EMU reported Terminator Power out of range. ■ Last Failure Parameter [0] contains a bit mask indicating which SCSI Port number(s) where the problem exists for cab 0. Bit 0 set indicates SCSI Port 1, Bit 1 set indicates SCSI port 2, etc. ■ Last Failure Parameter [1] contains a bit mask indicating which SCSI Port number(s) where the problem exists for cab 2. ■ Last Failure Parameter [2] contains a bit mask indicating which SCSI Port number(s) where the problem exists for cab 3.

Table 5–3 Last Failure Codes (Continued)

Code	Description
03A30790	**The EMU in cab 0 is performing an emergency shutdown because there are less than four functioning power supplies.**
03A40D90	**The EMU in cab 0 is performing an emergency shutdown because it has determined that the temperature is above the maximum limit.**
03A50690	**The EMU in cab 0 is performing an emergency shutdown because a fan has been missing for more than eight minutes.**
04010101	**The requester id component of the instance code passed to FM$REPORT_EVENT is larger than the maximum allowed for this environment.** ■ **Last Failure Parameter[0] contains the instance code value.**
04020102	**The requester's error table index passed to FM$REPORT_EVENT is larger than the maximum allowed for this requester.** ■ **Last Failure Parameter[0] contains the instance code value.** ■ **Last Failure Parameter[1] contains the requester error table index value.**
04030102	**The USB index supplied in the Event Information Packet (EIP) is larger than the maximum number of USBs.** ■ **Last Failure Parameter[0] contains the instance code value.** ■ **Last Failure Parameter[1] contains the USB index value.**
04040103	**The event log format found in V_fm_template_table is not supported by the Fault Manager. The bad format was discovered while trying to fill in a supplied Event Information Packet (EIP).** ■ **Last Failure Parameter[0] contains the instance code value.** ■ **Last Failure Parameter[1] contains the format code value.** ■ **Last Failure Parameter[2] contains the requester error table index value.**
04050100	**The Fault Manager could not allocate memory for its Event Information Packet (EIP) buffers.**
040A0100	**The caller of FM$CANCEL_SCSI_DE_NOTIFICATION passed an address of a deferred error notification routine which doesn't match the address of any routines for which deferred error notification is enabled.**

Table 5–3 Last Failure Codes (Continued)

Code	Description
040E0100	FM$ENABLE_DE_NOTIFICATION was called to enable deferred error notification but the specified routine was already enabled to receive deferred error notification.
040F0102	The Event Information Packet (EIP)->generic.mscp1.flgs field of the EIP passed to FM$REPORT_EVENT contains an invalid flag. ■ Last Failure Parameter[0] contains the instance code value. ■ Last Failure Parameter[1] contains the value supplied in the Event Information Packet (EIP)->generic.mscp1.flgs field.
04100101	Unexpected template type found during fmu_display_errlog processing. Last Failure Parameter[0] contains the unexpected template value.
04110101	Unexpected instance code found during fmu_memerr_report processing. ■ Last Failure Parameter[0] contains the unexpected instance code value.
04120101	CLIB$SDD_FAO call failed. ■ Last Failure Parameter[0] contains the failure status code value.
04140103	The template value found in the eip is not supported by the Fault Manager. The bad template value was discovered while trying to build an esd. ■ Last Failure Parameter [0] contains the instance code value. ■ Last Failure Parameter [1] contains the template code value. ■ Last Failure Parameter [2] contains the requester error table index value.
04170102	The template value found in the esd is not supported by the Fault Manager. The bad template value was discovered while trying to translate an esd into an eip. ■ Last Failure Parameter [0] contains the instance code value. ■ Last Failure Parameter [1] contains the template code value.

Table 5–3 Last Failure Codes (Continued)

Code	Description
04180103	The COMMON$MEM_FAIL_TEMPLATE template found in the esd is not supported by the Fault Manager. The bad template was discovered while trying to translate an esd into an eip. ■ Last Failure Parameter [0] contains the instance code value. ■ Last Failure Parameter [1] contains the template code value. ■ Last Failure Parameter [2] contains the template flags value.
05010100	In recursive_nonconflict could not get enough memory for scanning the keyword tables for configuration name conflicts.
06010100	The DUART was unable to allocate enough memory to establish a connection to the CLI.
06020100	A port other than terminal port A was referred to by a set terminal characteristics command. This is illegal.
06030100	A DUP question or default question message type was passed to the DUART driver, but the pointer to the input area to receive the response to the question was NULL.
06040100	Attempted to detach unattached maintenance terminal.
06050100	Attempted output to unattached maintenance terminal.
06060100	Attempted input from output only maintenance terminal service.
06070100	The DUART was unable to allocate enough memory for its input buffers
06080000	Controller was forced to restart due to entry of a CNTRL-K character on the maintenance terminal.
07010100	All available slots in the FOC notify table are filled.
07020100	FOC$CANCEL_NOTIFY() was called to disable notification for a rtn that did not have notification enabled.
07030100	Unable to start the Failover Control Timer before main loop.
07040100	Unable to restart the Failover Control Timer.
07050100	Unable to allocate flush buffer.
07060100	Unable to allocate active receive fcb.
07070100	The other controller killed this, but could not assert the kill line because nindy on or in debug. So it killed this now.

Table 5–3 Last Failure Codes (Continued)

Code	Description
07080000	The other controller crashed, so this one must crash too.
07090100	A call to EXEC$ALLOCATE_MEM_ZEROED failed to return memory when allocating VA Request Items.
08010101	A remote state change was received from the FOC thread that NVFOC does not recognize. ■ Last Failure Parameter[0] contains the unrecognized state value.
08020100	No memory could be allocated for a NVFOC information packet.
08030101	Work received on the S_nvfoc_bque did not have a NVFOC work id. ■ Last Failure Parameter[0] contains the id type value that was received on the NVFOC work queue.
08040101	Unknown work value received by the S_nvfoc_bque. ■ Last Failure Parameter[0] contains the unknown work value.
08060100	A really write command was received when the NV memory was not locked.
08070100	A write to NV memory was received while not locked.
08080000	The other controller requested this controller to restart.
08090010	The other controller requested this controller to shutdown.
080A0000	The other controller requested this controller to selftest.
080B0100	Could not get enough memory to build a FCB to send to the remote routines on the other controller.
080C0100	Could not get enough memory for FCBs to receive information from the other controller.
080D0100	Could not get enough memory to build a FCB to reply to a request from the other controller.
080E0101	An out-of-range receiver ID was received by the NVFOC communication utility (master send to slave send ACK). Last Failure Parameter[0] contains the bad id value.
080F0101	An out-of-range receiver ID was received by the NVFOC communication utility (received by master). Last Failure Parameter[0] contains the bad id value.

Table 5–3 Last Failure Codes (Continued)

Code	Description
08100101	A call to NVFOC$TRANSACTION had a from field (id) that was out of range for the NVFOC communication utility. Last Failure Parameter [0] contains the bad id value.
08110101	NVFOC tried to defer more than one FOC send. Last Failure Parameter[0] contains the master ID of the connection that had the multiple delays.
08140100	Could not allocate memory to build a workblock to queue to the NVFOC thread.
08160100	A request to clear the remote configuration was received but the memory was not locked.
08170100	A request to read the next configuration was received but the memory was not locked.
08180100	Could not get enough memory for FLS FCBs to receive information from the other controller.
08190100	An unlock command was received when the NV memory was not locked.
081A0100	Unable to allocate memory for remote work.
081B0101	Bad remote work received on remote work queue. ■ Last Failure Parameter[0] contains the id type value that was received on the NVFOC remote work queue.
081C0101	Bad member management work received. ■ Last Failure Parameter[0] contains the bad member management value that was detected.
081D0000	In order to go into mirrored cache mode, the controllers must be restarted.
081E0000	In order to go into nonmirrored cache mode, the controllers must be restarted.
081F0000	An FLM$INSUFFICIENT_RESOURCES error was returned from a FLM lock or unlock call.
08200000	Expected restart so the write_instance may recover from a configuration mismatch.
08210100	Unable to allocate memory to setup NVFOC lock/unlock notification routines.
09010100	Unable to acquire memory to initialize the FLM structures.
09640101	Work that was not FLM work was found on the FLM queue. Bad format is detected or the formatted string overflows the output buffer. ■ Last Failure Parameter [0] contains the work found.

Table 5–3 Last Failure Codes (Continued)

Code	Description
09650101	Work that was not FLM work was found on the FLM queue. ■ Last Failure Parameter [0] contains the structure found.
09670101	Local FLM detected an invalid facility to act upon. ■ Last Failure Parameter [0] contains the faciltiy found.
09680101	Remote FLM detected an error and requested the local controller to restart. ■ Last Failure Parameter [0] contains the reason for the request.
09C80101	Remote FLM detected an invalid facility to act upon. ■ Last Failure Parameter [0] contains the facility found.
09C90101	Remote FLM detected an invalid work type. ■ Last Failure Parameter [0] contains the work type found.
09CA0101	Remote FLM detected an invalid work type. ■ Last Failure Parameter [0] contains the work type found.
09CB0012	Remote FLM detected that the other controller has a facility lock manager at an incompatible revision level with this controller. ■ Last Failure Parameter [0] contains the controller's FLM revision. ■ Last Failure Parameter [1] contains the other controller's FLM revision.
0A020100	ILF$CACHE_READY unable to allocate necessary DWDs.
0A030100	ILF$CACHE_READY buffers_obtained > non-zero stack entry count.
0A040100	ILF$CACHE_READY DWD overrun.
0A050100	ILF$CACHE_READY DWD underrun.
0A060100	ILF$CACHE_READY found buffer marked for other controller.
0A070100	CACHE$FIND_LOG_BUFFERS returned continuation handle > 0.
0A080100	Not processing a bugcheck.
0A090100	No active DWD.
0A0A0100	Current entry pointer is not properly aligned.
0A0B0100	Next entry pointer is not properly aligned.

Table 5–3 Last Failure Codes (Continued)

Code	Description
0A0C0100	Next entry was partially loaded.
0A0E0100	Active DWD is not a DISK WRITE DWD as expected.
0A0F0100	New active DWD is not a DISK WRITE DWD as expected.
0A100100	Data buffer pointer is not properly aligned.
0A120100	Data buffer pointer is not properly aligned.
0A130100	Data buffer pointer is not properly aligned.
0A140100	New entry pointer is not properly aligned.
0A150100	New entry record type is out of range.
0A190102	ilf_depopulate_DWD_to_cache first page guard check failed. ■ Last Failure Parameter [0] contains the DWD address value ■ Last Failure Parameter [1] contains the buffer address value.
0A1C0102	ILF$LOG_ENTRY page guard check failed. ■ Last Failure Parameter [0] contains the DWD address value ■ Last Failure Parameter [1] contains the buffer address value.
0A1D0102	ILF$LOG_ENTRY page guard check failed. ■ Last Failure Parameter [0] contains the DWD address value ■ Last Failure Parameter [1] contains the buffer address value.
0A1E0102	ILF$LOG_ENTRY page guard check failed. ■ Last Failure Parameter [0] contains the DWD address value ■ Last Failure Parameter [1] contains the buffer address value.
0A1F0100	ilf_rebind_cache_buffs_to_DWDs found duplicate buffer for current DWD.
0A200101	Unknown bugcheck code passed to ilf_cache_interface_crash. ■ Last Failure Parameter [0] contains the unknown bugcheck code value.
0A210100	ilf_rebind_cache_buffs_to_DWDs found buffer type not IDX_ILF.
0A220100	ilf_rebind_cache_buffs_to_DWDs found buffer DBD index too big.
0A240100	ilf_check_handle_array_edc found ihiea EDC bad.

Table 5–3 Last Failure Codes (Continued)

Code	Description
0A250100	ilf_get_next_handle found no free ihiea entry.
0A260100	ilf_remove_handle could not find specified handle.
0A270100	ilf_depopulate_DWD_to_cache could not find handle for first buffer.
0A280100	ilf_depopulate_DWD_to_cache buffer handle does not match current handle.
0A290100	ilf_rebind_cache_buffs_to_DWDs could not find handle for DWD being rebound.
0A2B0100	ILF$CACHE_READY cache manager did not return multiple of DWD DBDs worth of buffers.
0A2C0100	ilf_rebind_cache_buffs_to_DWDs page guard check failed.
0A2D0100	ilf_populate_DWD_from_cache buffer stack entry zero or not page aligned.
0A2E0100	ilf_populate_DWD_from_cache returned buffer type not IDX_ILF.
0A2F0100	ilf_rebind_cache_buffs_to_DWDs buffer stack entry not page aligned.
0A300100	ilf_depopulate_DWD_to_cache buffer stack entry zero or not page aligned.
0A310100	ilf_distribute_cache_DWDs active handle count not as expected.
0A320102	ILF$LOG_ENTRY, page guard check failed. ■ Last Failure Parameter [0] contains the DWD address value. ■ Last Failure Parameter [1] contains the buffer address value.
0A330100	ilf_ouput_error, message_keeper_array full.
0A340101	ilf_output_error, no memory for message display. ■ Last Failure Parameter [0] contains the message address value.
0B010010	Due to an operator request, the controllers non-volatile configuration information has been reset to its initial state.
0B020100	The controller has insufficient free memory to allocate a Configuration Manager work item needed to perform the requested configuration reset.
0B030100	The controller has insufficient free memory to allocate a Configuration Manager work item needed to perform the requested configuration restore.
0B040100	The controller has insufficient free memory to allocate a Configuration Manager WWL work item needed to perform the requested World-Wide LUN ID change.

Table 5–3 Last Failure Codes (Continued)

Code	Description
0B050100	**More requests to WWL$NOTIFY have been made than can be supported.**
0B060100	**A call to WWL$UPDATE resulted in the need for another World-Wide LUN ID slot, and no free slots were available.**
0B070100	**The controller has insufficient free memory to allocate a Configuration Manager DNN work item needed to perform the requested Device Nickname change.**
0B080100	**More requests to DNN$NOTIFY have been made than can be supported.**
0B090100	**A call to DNN$UPDATE resulted in the need for another Device Nickname slot, and no free slots were available.**
0D000011	**The EMU firmware returned a bad status when told to poweroff.** ■ **Last Failure Parameter [0] contains the value of the bad status.**
0E000100	**VA$ENABLE_NOTIFICATION failed with insufficient resources at controller initialization time.**
0E010102	**An invalid status was returned from CACHE$LOCK_READ during a remote copy.** ■ **Last Failure Parameter [0] contains the DD address.** ■ **Last Failure Parameter [1] contains the invalid status.**
0E020100	**Unable to allocate memory for the Fault Management Event Information Packet used in generating error logs to the host.**
0E030100	**Unable to allocate memory for a Failover Control Block.**
0E040100	**Unable to allocate memory for a Failover Control Block.**
0E050100	**Unable to allocate memory for a Failover Control Block.**
0E060100	**Unable to allocate memory for a Failover Control Block.**
0E096980	**This controller has detected a failed link during the heartbeat to a remote target. The other controller has a good link to the remote target. In order to resume operations to that remote target, this controller is restarted to failover the initiator unit to the other controller.**
0E0A6980	**A remote copy write has failed all recovery attempts on this controller. As part of further error recovery, this controller is restarted, to force the initiator unit over to the other controller so the remote copy can be retried.**

Table 5–3 Last Failure Codes (Continued)

Code	Description
0E0B6980	This controller has detected a failed link upon dual controllers restarting. The other controller has a good link to the remote target. In order to resume operations to that remote target, this controller is restarted to failover to the initiator unit to the other controller.
12000103	Two values found not equal. ■ Last Failure Parameter [0] contains the ASSUME instance address. ■ Last Failure Parameter [1] contains the first variable value. ■ Last Failure Parameter [2] contains the second variable value.
12010103	Two values found equal. ■ Last Failure Parameter [0] contains the ASSUME instance address. ■ Last Failure Parameter [1] contains the first variable value. ■ Last Failure Parameter [2] contains the second variable value.
12020103	First value found bigger or equal. ■ Last Failure Parameter [0] contains the ASSUME instance address. ■ Last Failure Parameter [1] contains the first variable value. ■ Last Failure Parameter [2] contains the second variable value.
12030103	First value found bigger. ■ Last Failure Parameter [0] contains the ASSUME instance address. ■ Last Failure Parameter [1] contains the first variable value. ■ Last Failure Parameter [2] contains the second variable value.
12040103	First value found smaller or equal. ■ Last Failure Parameter [0] contains the ASSUME instance address. ■ Last Failure Parameter [1] contains the first variable value. ■ Last Failure Parameter [2] contains the second variable value.

Table 5–3 Last Failure Codes (Continued)

Code	Description
12050103	First value found smaller. ■ Last Failure Parameter [0] contains the ASSUME instance address. ■ Last Failure Parameter [1] contains the first variable value. ■ Last Failure Parameter [2] contains the second variable value.
12060102	vsi_ptr->no_interlock not set. ■ Last Failure Parameter [0] contains the ASSUME instance address. ■ Last Failure Parameter [1] contains nv_index value.
12070102	vsi_ptr->allocated_this not set. ■ Last Failure Parameter [0] contains the ASSUME instance address. ■ Last Failure Parameter [1] contains nv_index value.
12080102	vsi_ptr->cs_interlocked not set. ■ Last Failure Parameter [0] contains the ASSUME instance address. ■ Last Failure Parameter [1] contains nv_index value.
12090102	Unhandled switch case. ■ Last Failure Parameter [0] contains the ASSUME instance address. ■ Last Failure Parameter [1] contains nv_index value.
120A0103	WARP expand point value does not match blocks. ■ Last Failure Parameter [0] contains the warp address. ■ Last Failure Parameter [1] contains the warp expand point value. ■ Last Failure Parameter [2] contains the warp blocks value.
120B2380	Forced restart of the controller upon a cache battery failure. This is only done when under conditions which require the restart for error recovery.
20010100	The action for work on the CLI queue should be CLI_CONNECT, CLI_COMMAND_IN or CLI_PROMPT. If it isn’t one of these three, this bugcheck will result.
20020100	The FAO returned a non-successful response. This will only happen if a bad format is detected or the formatted string overflows the output buffer.

Table 5–3 Last Failure Codes (Continued)

Code	Description
20030100	The type of work received on the CLI work queue wasn't of type CLI.
20060100	A work item of an unknown type was placed on the CLI's SCSI Virtual Terminal thread's work queue by the CLI.
20080000	This controller requested this controller to restart.
20090010	This controller requested this controller to shutdown.
200A0000	This controller requested this controller to selftest.
200B0100	Could not get enough memory for FCBs to receive information from the other controller.
200D0101	After many calls to DS$PORT_BLOCKED, we never got a FALSE status back (which signals that nothing is blocked). ■ Last Failure Parameter[0] contains the port number (1 - n) that we were waiting on to be unblocked.
200E0101	While traversing the structure of a unit, a config_info node was discovered with an unrecognized structure type. ■ Last Failure Parameter[0] contains the structure type number that was unrecognized.
200F0101	A config_info node was discovered with an unrecognized structure type. ■ Last Failure Parameter[0] contains the structure type number that was unrecognized.
20100101	A config_node of type VA_MA_DEVICE had an unrecognized SCSI device type. ■ Last Failure Parameter[0] contains the SCSI device type number that was unrecognized.
20110100	An attempt to allocate memory so the CLI prompt messages could be deleted failed.
20120101	While traversing the structure of a unit, a config_info node was discovered with an unrecognized structure type. ■ Last Failure Parameter[0] contains the structure type number that was unrecognized.
20130101	While traversing the structure of a unit, the device was of an unrecognized type. ■ Last Failure Parameter[0] contains the SCSI device type that was unrecognized.
20160000	In order to go into mirrored cache mode, the controllers must be restarted.
20160100	Unable to allocate resources needed for the CLI local program.

Table 5–3 Last Failure Codes (Continued)

Code	Description
20170000	In order to go into unmirrored cache mode, the controllers must be restarted.
20190010	A cache state of a unit remains WRITE_CACHE_UNWRITTEN_DATA. The unit is not ONLINE, thus this state would only be valid for a very short period of time.
201A0100	An attempt to allocate memory so a CLI prompt message could be reformatted failed.
201B0100	Insufficient resources to get memory to lock CLI.
201C0100	Insufficient resources to get memory to unlock CLI.
201D0100	With “set failover copy=other”, the controller which is having the configuration copied to will automatically be restarted via this bugcheck.
201E0101	CLI$ALLOCATE_STRUCT() was called by a process which it does not support ■ Last Failure Parameter [0] contains pscb address.
201F0101	CLI$DEALLOCATE_ALL_STRUCT() was called by a process which it does not support. ■ Last Failure Parameter [0] contains pscb address.
20200100	CLI$ALLOCATE_STRUCT() could not obtain memory for a new nvfoc_rw_remote_nvmem structure.
20220020	This controller requested this subsystem to poweroff.
20230000	A restart of both controllers is required when exiting multibus failover.
20240000	A restart of both controllers is required when entering multibus failover.
20260000	With “set failover copy=other”, the controller which is having the configuration copied to will automatically be restarted via this bugcheck.
20640000	Nindy was turned on.
20650000	Nindy was turned off.
20692010	To enter dual-redundant mode, both controllers must be of the same type.
206A0000	Controller restart forced by DEBUG CRASH REBOOT command.
206B0010	Controller restart forced by DEBUG CRASH NOREBOOT command.
206C0020	Controller was forced to restart in order for new controller code image to take effect.
206D0000	Controller code load was not completed because the controller could not rundown all units.

Table 5–3 Last Failure Codes (Continued)

Code	Description
43000100	Encountered an unexpected structure type on hp_work_q.
43030100	Unable to allocate the necessary number of large Sense Data buckets in HPP_init().
43100100	Encountered a NULL completion routine pointer in a DD.
43130100	Could not allocate a large sense bucket.
43160100	A sense data bucket of unknown type (neither LARGE or SMALL) was passed to deallocate_SDB().
43170100	Call to VA$ENABLE_NOTIFICATION() failed due to INSUFFICIENT_RESOURCES.
43190100	Unable to allocate necessary memory in HPP_int().
431A0100	Unable to allocate necessary timer memory in HPP_int().
43210101	HPP detected unknown error indicated by HPT. ■ Last Failure Parameter [0] contains the error value.
43220100	Unable to obtain Free CSR in HPP().
43230101	During processing to maintain consistency of the data for Persistent Reserve SCSI commands, an internal inconsistency was detected. ■ Last Failure Parameter [0] contains a code defining the precise nature of the inconsistency.
44640100	Not enough abort requests in the system.
44650100	Exceeded the number of SEST abort retries.
44660100	Unable to allocate enough abort requests for Fibre Channel Host Port Transport software layer.
44670100	Unable to allocate enough command HTBs for Fibre Channel Host Port Transport software layer.
44680100	Unable to allocate enough FC HTBs for Fibre Channel Host Port Transport software layer.
44690100	Unable to allocate enough work requests for Fibre Channel Host Port Transport software layer.
446A0100	Unable to allocate enough HTBs for Fibre Channel Host Port Transport software layer.

Table 5–3 Last Failure Codes (Continued)

Code	Description
446B0100	Unable to allocate enough TIS structures for Fibre Channel Host Port Transport software layer.
446C0100	Unable to allocate enough MFSs for Fibre Channel Host Port Transport software layer.
446D0100	Unable to allocate enough Tachyon headers for Fibre Channel Host port Transport software layer.
446E0100	Unable to allocate enough EDB structures for Fibre Channel Host Port Tansport software layer.
446F0100	Unable to allocate enough LSFS structures for Fibre Channel Host Port Transport software layer.
44700100	Unable to allocate enough TPS structures for Fibre Channel Host Port Transport software layer.
44720101	An illegal status was returned to the FLOGI command error handler. ■ Last Failure Parameter [0] contains error value.
44730101	An illegal completion message was returned by the Tachyon to I960. ■ Last Failure Parameter [0] contains the completion message type.
44740101	The Host Port Transport process handler received an illegal timer. ■ Last Failure Parameter [0] contains the timer pointer. type.
44750100	The Host Port Transport work handler received an illegal work request.
44760100	The Host Port Transport ran out of work requests.
44770102	An illegal script return value was received by the Host Port Transport init script handler. ■ Last Failure Parameter [0] contains the init function. ■ Last Failure Parameter [1] contains return value. The Host Port Transport ran out of work requests.

Table 5–3 Last Failure Codes (Continued)

Code	Description
44780102	An illegal script return value was received by the Host Port Transport send script handler. ■ Last Failure Parameter [0] contains the send function. ■ Last Failure Parameter [1] contains return value. The Host Port Transport ran out of work requests.
44790102	An illegal script return value was received by the Host Port Transport response script handler. ■ Last Failure Parameter [0] contains the rsp function. ■ Last Failure Parameter [1] contains return value. The Host Port Transport ran out of work requests.
447A0102	An illegal script return value was received by the Host Port Transport error script handler. ■ Last Failure Parameter [0] contains the error function. ■ Last Failure Parameter [1] contains return value. The Host Port Transport ran out of work requests.
447B0100	The Host Port Transport response script handler received a response before a command was sent.
447C0101	Unhandled command HTB status. ■ Last Failure Parameter [0] contains the status value. The Host Port Transport ran out of work requests.
447D0100	The Host Port Transport ran out of command HTBs.
44800101	An illegal status was returned to the name service command error handler. ■ Last Failure Parameter [0] contains error value.
44810101	An illegal status was returned to the PLOGI command error handler. ■ Last Failure Parameter [0] contains error value.
44820101	An illegal abort type was given to the Host Port Transport abort handler. ■ Last Failure Parameter [0] contains abort type.

Table 5–3 Last Failure Codes (Continued)

Code	Description
44830101	An illegal failover request was given to the Host Port Transport request handler. ■ Last Failure Parameter [0] contains failover request.
44840101	An illegal failover response was given to the Host Port Transport failover response handler. ■ Last Failure Parameter [0] contains failover response.
44850100	The Host Port Transport failover control had a bad send count.
44860100	Unable to allocate enough ESD structures for Fibre Channel Host Port Transport software layer.
44870101	An illegal abort type was given to the Host Port Transport abort handler. ■ Last Failure Parameter [0] contains abort type.
448B0100	Host Port Transport software layer unable to allocate work item for updating NV memory during LOGI.
448C0100	Host Port Transport software layer unable to allocate work item for updating LOGI completion routine.
448D0100	Host port transport software layer ran out of temporary HCBs.
448E0100	Host Port Transport software layer unable to allocate memory for quick FC responses.
448F0100	Host Port Transport software layer unable to allocate memory for quick responses.
44900100	Host Port Transport software layer unable to allocate memory for HCBs.
44910100	Host Port Transport software layer unable to allocate memory for HTB Tachyon header.
44920101	An invalid work item was detected on abort pending work queue. ■ Last Failure Parameter [0] contains invalid work type.
44930100	Unable to allocate enough Peer to Peer Remote Copy Tachyon headers for Fibre Channel Host Port Transport software layer.
44940100	Host Port Transport software layer detected an error during buffer-to-buffer credit check.
44950100	Host Port Transport software layer unable to acquire an FC quick response resource.
44960101	An invalid work item was detected on work pending queue. ■ Last Failure Parameter [0] contains invalid work type.

Table 5–3 Last Failure Codes (Continued)

Code	Description
44970100	Host Port Transport software layer unable to access Tachyon register.
449A0101	An invalid work item was detected on abort pending work queue. ■ Last Failure Parameter [0] contains work type.
44892091	Host Port Hardware diagnostic field at system initialization. ■ Last Failure Parameter [0] contains failed port number.
64000100	Insufficient buffer memory to allocate data structures needed to propagate SCSI Mode Select changes to other controller.
64010100	During an initialization of LUN specific mode pages, an unexpected device type was encountered.
64020100	A DD is already in use by a RCV DIAG command - cannot get two RCV_DIAGs without sending the data for the first.
64030104	A DD is already in use by an RCV DIAG command—cannot get two RCV_DIAGs without sending the data for the first. ■ Last Failure Parameter [0] contains DD_PTR. ■ Last Failure Parameter [1] contains blocking HTB_PTR. ■ Last Failure Parameter [2] contains HTB_PTR flags. ■ Last Failure Parameter [3] contains this HTB_PTR.
80010100	An HTB was not available to issue an I/O when it should have been.
80030100	DILX tried to release a facility that wasn't reserved by DILX.
80040100	DILX tried to change the unit state from MAINTENANCE_MODE to NORMAL but was rejected because of insufficient resources.
80050100	DILX tried to change the usb unit state from MAINTENANCE_MODE to NORMAL but DILX never received notification of a successful state change.
80060100	DILX tried to switch the unit state from MAINTENANCE_MODE to NORMAL but was not successful.
80070100	DILX aborted all cmds via va$d_abort() but the HTBS haven't been returned.
80090100	DILX received an end msg which corresponds to an op code not supported by DILX.

Table 5–3 Last Failure Codes (Continued)

Code	Description
800A0100	DILX was not able to restart his timer.
800B0100	DILX tried to issue an I/O for an opcode not supported.
800C0100	DILX tried to issue a oneshot I/O for an opcode not supported.
800D0100	A DILX device control block contains an unsupported unit_state.
800F0100	A DILX cmd completed with a sense key that DILX does not support.
80100100	DILX could not compare buffers because no memory was available from EXEC$ALLOCATE_MEM_ZEROED.
80110100	While DILX was deallocating his deferred error buffers, at least one could not be found.
80120100	DILX expected an Event Information Packet (EIP) to be on the receive EIP queue but no EIPs were there.
80130100	DILX was asked to fill a data buffer with an unsupported data pattern.
80140100	DILX could not process an unsupported answer in dx$reuse_params().
80150100	A deferred error was received with an unsupported template.
83020100	An unsupported message type or terminal request was received by the CONFIG virtual terminal code from the CLI.
83030100	Not all alter_device requests from the CONFIG utility completed within the timeout interval.
84010100	An unsupported message type or terminal request was received by the CLONE virtual terminal code from the CLI.
85010100	HSUTIL tried to release a facility that wasn't reserved by HSUTIL.
85020100	HSUTIL tried to change the unit state from MAINTENANCE_MODE to NORMAL but was rejected because of insufficient resources.
85030100	HSUTIL tried to change the usb unit state from MAINTENANCE_MODE to NORMAL but HSUTIL never received notification of a successful state change.
85040100	HSUTIL tried to switch the unit state from MAINTENANCE_MODE to NORMAL but was not successful.
86000020	Controller was forced to restart in order for new code load or patch to take effect.

Table 5–3 Last Failure Codes (Continued)

Code	Description
86010010	The controller code load function is about to update the program card. This requires controller activity to cease. This code is used to inform the other controller this controller will stop responding to inter-controller communications during card update. An automatic restart of the controller at the end of the program card update will cause normal controller activity to resume.
86020011	The EMU firmware returned a bad status when told to prepare for a code load. Last Failure Parameter [0] contains the value of the bad status.
8A040080	New cache module failed diagnostics. The controller has been reset to clear the error.
8A050080	Could not initialize new cache module. The controller has been reset to clear the error.
8B000186	An single bit error was found by software scrubbing. ■ Last Failure Parameter [0] contains the address of the first single bit ecc error found. ■ Last Failure Parameter [1] contains the count of single bit ecc errors found in the same region below this address. ■ Last Failure Parameter [2] contains the lower 32-bits of the actual data read at the Parameter [0] address. ■ Last Failure Parameter [3] contains the higher 32-bits of the actual data read at the Parameter [0] address. ■ Last Failure Parameter [4] contains the lower 32-bits of the expected data at the Parameter [0] address. ■ Last Failure Parameter [5] contains the higher 32-bits of the expected data at the Parameter [0] address.

Recommended Repair Action Codes

Recommended Repair Action Codes are embedded in Instance and Last Failure codes. Refer to “Instance Codes,” page -22, and “Last Failure Codes,” page -53, for a more detailed description of the relationship between these codes.

Table 5–4 contains the repair action codes assigned to each significant event in the system.

Table 5–4 Recommended Repair Action Codes

Code	Description
00	No action necessary.
01	An unrecoverable hardware detected fault occurred or an unrecoverable software inconsistency was detected. Proceed with controller support avenues.
03	Follow the recommended repair action contained as indicated in the Last Failure Code.
04	Two possible problem sources are indicated: ■ In the case of a shelf with dual power supplies, one of the power supplies has failed. Follow repair action 07 for the power supply with the Power LED out. ■ One of the shelf blowers has failed. Follow repair action 06.
05	Four possible problem sources are indicated: ■ Total power supply failure on a shelf. Follow repair action 09. ■ A device inserted into a shelf that has a broken internal SBB connector. Follow repair action 0A. ■ A standalone device is connected to the controller with an incorrect cable. Follow repair action 08. ■ A controller hardware failure. Follow repair action 20.
06	Determine which blower has failed and replace it.
07	Replace power supply.
08	Replace the cable. Refer to the specific device documentation.
09	Determine power failure cause.

Table 5–4 Recommended Repair Action Codes (Continued)

Code	Description
0A	Determine which SBB has a failed connector and replace it.
0B	The other controller in a dual-redundant configuration has been reset with the “Kill” line by the controller that reported the event. To restart the “Killed” controller enter the CLI command RESTART OTHER on the “Surviving” controller and then depress the (//) RESET button on the “Killed” controller. If the other controller is repeatedly being “Killed” for the same or a similar reason, follow repair action 20.
0C	Both controllers in a dual-redundant configuration are attempting to use the same SCSI ID (either 6 or 7 as indicated in the event report). The other controller of the dual-redundant pair has been reset with the “Kill” line by the controller that reported the event. Two possible problem sources are indicated: ■ A controller hardware failure. ■ A controller backplane failure. First, follow repair action 20 for the “Killed” controller. If the problem persists follow repair action 20 for the “Surviving” controller. If the problem still persists replace the controller backplane.
0D	The Environmental Monitor Unit has detected an elevated temperature condition. Check the shelf and its components for the cause of the fault.
0E	The Environmental Monitor Unit has detected an external air-sense fault. Check components outside of the shelf for the cause of the fault.
0F	An environmental fault previously detected by the Environmental Monitor Unit is now fixed. This event report is notification that the repair was successful.
10	Restore on-disk configuration information to original state.
20	Replace the controller module.
22	Replace the indicated cache module or the appropriate memory DIMMs on the indicated cache module.

Table 5–4 Recommended Repair Action Codes (Continued)

Code	Description
23	Replace the indicated write cache battery. CAUTION: BATTERY REPLACEMENT MAY CAUSE INJURY.
24	Check for the following invalid write cache configurations: ■ If the wrong write cache module is installed, replace with the matching module or clear the invalid cache error via the CLI. Refer to *HSG80 ACS Version 8.x Configuration and CLI Reference Guide* for more information. ■ If the write cache module is missing, reseat cache if it is actually present, or add the missing cache module, or clear the invalid cache error via the CLI. Refer to *HSG80 ACS Version 8.x Configuration and CLI Reference Guide* for more details. ■ If in a dual-redundant configuration and one of the write cache modules is missing, match write cache boards with both controllers.
25	An unrecoverable Memory System failure occurred. Upon restart the controller will generate one or more Memory System Failure Event Sense Data Responses; follow the repair action(s) contained therein.
37	The Memory System Failure translator could not determine the failure cause. Follow repair action 01.
38	Replace the indicated cache memory DIMM.
39	Check that the cache memory DIMMs are properly configured.
3A	This error applies to this controller's mirrored cache. Since the mirrored cache is physically located on the other controller's cache module, replace the other controller's cache module, or the appropriate memory DIMMs on the other controller's cache module.
3C	This error applies to this controller's mirrored cache. Since the mirrored cache is physically located on the other controller's cache module, replace the indicated cache memory DIMM on the other controller's cache module.

Table 5–4 Recommended Repair Action Codes (Continued)

Code	Description
3D	Either the primary cache or the mirrored cache has inconsistent data. Check for the following conditions to determine appropriate means to restore mirrored copies. ■ If the mirrored cache is reported as inconsistent and a previous FRU Utility warmswap of the mirrored cache module was unsuccessful, retry the procedure via the FRU Utility, by removing the module and re-inserting the same or a new module. ■ Otherwise, enter the CLI command SHUTDOWN THIS to clear the inconsistency upon reboot.
3E	Replace the indicated cache module.
3F	No action necessary, cache diagnostics will determine whether the indicated cache module is faulty.
40	If the Sense Data FRU field is non-zero, follow repair action 41. Otherwise, replace the appropriate FRU associated with the device's SCSI interface or the entire device.
41	Consult the device's maintenance manual for guidance on replacing the indicated device FRU.
43	Update the configuration data to correct the problem.
44	Replace the SCSI cable for the failing SCSI bus. If the problem persists, replace the controller backplane, drive backplane, or controller module.
45	Interpreting the device supplied Sense Data is beyond the scope of the controller's firmware. See the device's service manual to determine the appropriate repair action, if any.
50	The RAIDset is inoperative for one or more of the following reasons: ■ More than one member malfunctioned. Perform repair action 55. ■ More than one member is missing. Perform repair action 58. ■ Before reconstruction of a previously replaced member completes another member becomes missing or malfunctions. Perform repair action 59. ■ The members have been moved around and the consistency checks show mismatched members. Perform repair action 58.

Table 5–4 Recommended Repair Action Codes (Continued)

Code	Description
51	The mirrorset is inoperative for one or more of the following reasons: ■ The last NORMAL member has malfunctioned. Perform repair actions 55 and 59. ■ The last NORMAL member is missing. Perform repair action 58. ■ The members have been moved around and the consistency checks show mismatched members. Perform repair action 58.
52	The indicated Storageset member was removed for one of the following reasons: ■ The member malfunctioned. Perform repair action 56. ■ By operator command. Perform repair action 57.
53	The STORAGESET may be in a state that prevents the adding of a replacement member, check the state of the STORAGESET and its associated UNIT and resolve the problems found before adding the replacement member.
54	The device may be in a state that prevents adding it as a replacement member or may not be large enough for the STORAGESET. Use another device for the ADD action and perform repair action 57 for the device that failed to be added.
55	Perform the repair actions indicated in any and all event reports found for the devices that are members of the STORAGESET.
56	Perform the repair actions indicated in any and all event reports found for the member device that was removed from the STORAGESET. Then perform repair action 57.
57	Delete the device from the FAILEDSET and redeploy, perhaps by adding it to the SPARESET so it will be available to be used to replace another failing device.
58	Install the physical devices that are members of the STORAGESET in the proper Port, Target, and LUN locations.
59	Delete the STORAGESET, recreate it with the appropriate ADD, INITIALIZE, and ADD UNIT commands and reload its contents from backup storage.
5A	Restore the MIRRORSET data from backup storage.

Table 5–4 Recommended Repair Action Codes (Continued)

Code	Description
5B	The mirrorset is inoperative due to a disaster tolerance failsafe locked condition, as a result of the loss of all local or remote NORMAL/NORMALIZING members while ERROR_MODE=FAILSAFE was enabled. To clear the failsafe locked condition, enter the CLI command SET unit-number ERROR_MODE=NORMAL.
5C	The mirrorset has at least one local NORMAL/NORMALIZING member and one remote NORMAL/NORMALIZING member. Failsafe error mode can now be enabled by entering the CLI command SET unit-number ERROR_MODE=FAILSAFE.
5D	The last member of the SPARESET has been removed. Add new drives to the SPARESET.
69	An unrecoverable fault occurred at the host port. There may be more than one entity attempting to use the same SCSI ID, or some other bus configuration error, such as improper termination, may exist. If no SCSI host bus configuration problems are found, follow repair action 01.
80	An EMU fault has occurred.
81	The EMU reported terminator power out of range. Replace the indicated I/O module(s).
83	An EMU (Environmental Monitoring Unit) has become unavailable. ■ This EMU Unit (and associated cabinet) may have been removed from the subsystem; no action is required. ■ The cabinet has lost power; restore power to the cabinet. ■ The EM- to-EMU communications bus cable has been disconnected or broken; replace or reconnect the cable to reestablish communications. ■ The specified EMU is broken; replace the EMU module. ■ The EMU in cabinet 0 is broken; replace the EMU module.
88	The remote copy set has an online initiator unit and at least one remote NORMAL/NORMALIZING target member. Failsafe error mode can now be enabled by entering the CLI command set rc-set-name ERROR_MODE=FAILSAFE.

Table 5–4 Recommended Repair Action Codes (Continued)

Code	Description
89	The remote copy set is inoperative due to a disaster tolerance failsafe locked condition, as a result of the loss of the local initiator unit or remote NORMAL/NORMALIZING target members while ERROR_MODE=FAILSAFE was enabled. To clear the failsafe locked condition, enter the CLI command SET rc-set-name ERROR_MODE=NORMAL.
8A	The indicated remote copy set target member was removed for one of the following reasons: ■ By operator command. ■ The member malfunctioned. Perform the repair actions indicated in any and all event reports found for that target member.
8B	Unable to communicate to the target member of the remote copy set for one of the following reasons: ■ The target malfunctioned. Perform the repair actions indicated in any and all event reports found for that target unit. ■ The target controller malfunctioned. Perform the repair actions indicated in any and all event reports found for that target controller. ■ Malfunction that occurred in the Fibre Channel fabric between the peer controllers.
8C	Unable to communicate to an initiator unit of the remote copy set because the unit malfunctioned. Perform the repair actions indicated in any and all event reports found for that initiator unit.
8D	It is not safe to present the WWLID to the host because a site failover may have taken place, but cannot confirm with the remote controller. Perform one of the following repair actions: ■ Follow repair action 8B. ■ If a site failover took place, and you don’t plan to perform a future site failback, then delete the remote copy set on this controller.
8E	It is not safe to present the WWLID to the host because a site failover has taken place. Perform one of the following repair actions: ■ Perform a site failback. ■ Delete the remote copy set on this controller.

Component Identifier Codes

Component Identifier Codes are embedded in Instance and Last Failure codes. Refer to "Instance Codes," page 5–22, and "Last Failure Codes," page 5–53, for a more detailed description of the relationship between these codes.

Table 5–5 lists the component identifier codes.

Table 5–5 Component Identifier Codes

Code	Description
01	Executive Services
02	Value Added Services
03	Device Services
04	Fault Manager
05	Common Library Routines
06	Dual Universal Asynchronous Receiver/Transmitter Services
07	Failover Control
08	Nonvolatile Parameter Memory Failover Control
09	Facility Lock Manager
0A	Integrated Logging Facility
0B	Configuration Manager Process
0C	Memory Controller Event Analyzer
0D	Poweroff Process
12	Value Added Services (extended)
20	Command Line Interpreter
43	Host Port Protocol Layer
44	Host Port Transport Layer
64	SCSI Host Value Added Services
80	Disk Inline Exercise (DILX)

Table 5–5 Component Identifier Codes (Continued)

Code	Description
82	Subsystem Built-In Self Tests (BIST)
83	Device Configuration Utilities (CONFIG)
84	Clone Unit Utility (CLONE)
85	Format and Device Code Load Utility (HSUTIL)
86	Code Load/Code Patch Utility (CLCP)
8A	Field Replacement Utility (FRUTIL)
8B	Periodic Diagnostics (PDIAG)

Event Threshold Codes

Table 5–6 lists the classifications for event notification and recovery threshold values.

Table 5–6 Event Notification/Recovery Threshold Classifications

Threshold Value	Classification	Description
01	IMMEDIATE	Failure or potential failure of a component critical to proper controller operation is indicated; immediate attention is required.
02	HARD	Failure of a component that affects controller performance or precludes access to a device connected to the controller is indicated.
0A	SOFT	An unexpected condition detected by a controller firmware component (e.g., protocol violations, host buffer access errors, internal inconsistencies, uninterpreted device errors, etc.) or an intentional restart or shutdown of controller operation is indicated.
64	INFORMATIONAL	An event having little or no effect on proper controller or device operation is indicated.

ASC/ASCQ Codes

Table 5–7 lists HSG80-specific SCSI ASC and ASCQ codes. These codes are Template-specific and appear at byte offsets 12 and 13.

NOTE: Additional codes that are common to all SCSI devices can be found in the SCSI specification.

Table 5–7 ASC and ASCQ Codes

ASC Code	ASCQ Code	Description
04	80	Logical unit is disaster tolerant failsafe locked (inoperative).
3F	85	Test Unit Ready or Read Capacity Command failed
3F	87	Drive failed by a Host Mode Select command.
3F	88	Drive failed due to a deferred error reported by drive.
3F	90	Unrecovered Read/Write error.
3F	C0	No response from one or more drives.
3F	C2	NV memory and drive metadata indicate conflicting drive configurations.
3F	D2	Synchronous Transfer Value differences between drives.
80	00	Forced error on Read
82	01	No Command control structures available.
84	04	Command failed - SCSI ID verification failed.
85	05	Data returned from drive is invalid.
89	00	Request Sense command to drive failed.
8A	00	Illegal command for pass through mode.
8C	04	Data transfer request error.
8F	00	Premature completion of a drive command.
93	00	Drive returned vendor unique sense data.

Table 5–7 ASC and ASCQ Codes (Continued)

ASC Code	ASCQ Code	Description
A0	00	Last failure event report.
A0	01	Nonvolatile parameter memory component event report.
A0	02	Backup battery failure event report.
A0	03	Subsystem built-in self test failure event report.
A0	04	Memory system failure event report.
A0	05	Failover event report.
A0	07	RAID membership event report.
A0	08	Multiple Bus failover event.
A0	09	Multiple Bus failback event.
A0	0A	Disaster Tolerance failsafe error mode can now be enabled.
A1	00	Shelf OK is not properly asserted.
A1	01	Unable to clear SWAP interrupt. Interrupt disabled.
A1	02	Swap interrupt re-enabled.
A1	03	Asynchronous SWAP detected.
A1	04	Controller shelf OK is not properly asserted.
A1	0A	EMU fault: Power Supplies not OK.
A1	0B	EMU fault: Fans not OK.
A1	0C	EMU fault: Temperature not OK.
A1	0D	EMU fault: External Air Sense not OK.
A1	10	Power supply fault is now fixed.
A1	11	Fans fault is now fixed.
A1	12	Temperature fault is now fixed.
A1	13	External Air Sense fault is now fixed.

Table 5–7 ASC and ASCQ Codes (Continued)

ASC Code	ASCQ Code	Description
A1	14	EMU and cabinet now available.
A1	15	EMU and cabinet now unavailable.
B0	00	Command timeout.
B0	01	Watchdog timer timeout.
D0	01	Disconnect timeout.
D0	02	Chip command timeout.
D0	03	Byte transfer timeout.
D1	00	Bus errors.
D1	02	Unexpected bus phase.
D1	03	Disconnect expected.
D1	04	ID Message not sent.
D1	05	Synchronous negotiation error.
D1	07	Unexpected disconnect.
D1	08	Unexpected message.
D1	09	Unexpected Tag message.
D1	0A	Channel busy.
D1	0B	Device initialization failure. Device sense data available.
D2	00	Miscellaneous SCSI driver error.
D2	03	Device services had to reset the bus.
D3	00	Drive SCSI chip reported gross error.
D4	00	Non-SCSI bus parity error.
D5	02	Message Reject received on a valid message.
D7	00	Source driver programming error.

Table 5–7 ASC and ASCQ Codes (Continued)

ASC Code	ASCQ Code	Description
E0	03	Fault Manager detected an unknown error code.
E0	06	Maximum number of errors for this I/O exceeded.
E0	07	Drive reported recovered error without transferring all data.

Chapter 6

Connectors, Switches, and LEDs

This chapter provides connector, switches, and LED information for the HSG80 Array Controller.

Controller Front Panel

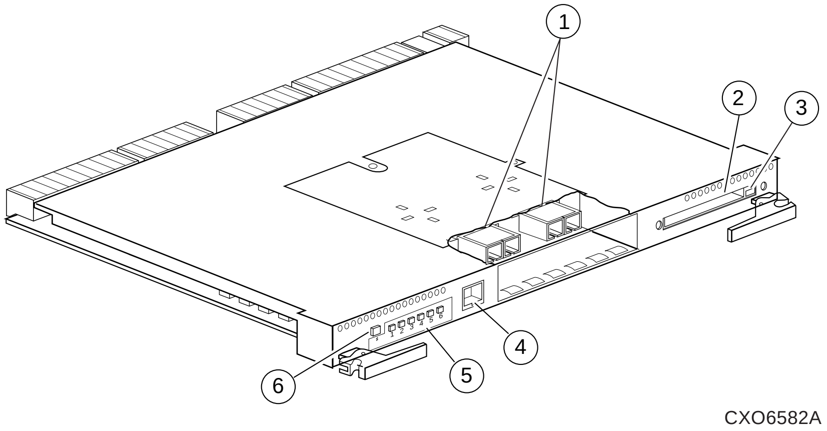

Figure 6–1. Controller Front Panel Connectors, Switches, and LEDS

Table 6–1 Controller Front Panel Connectors, Switches, and LEDs

Location	Description
①	**GLM connection ports**
②	**Program-card slot**
③	**Program-card ejection button**
④	**Maintenance port**
⑤	**Operator control panel**
⑥	**Controller reset button**

Operator Control Panel LEDs

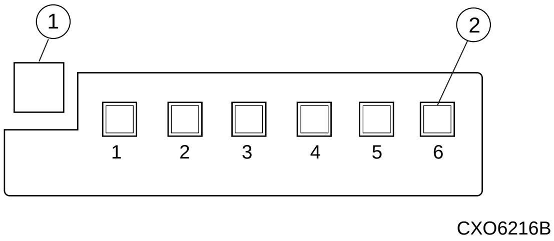

Figure 6–2. Operator Control Panel Switches and LEDs

Table 6–2 Operator Control Panel Switches and LEDs

Location	Description
①	**Controller reset button**
②	**Port buttons/LEDs (1 through 6)**

Gigabit Link Module (GLM) Connectors

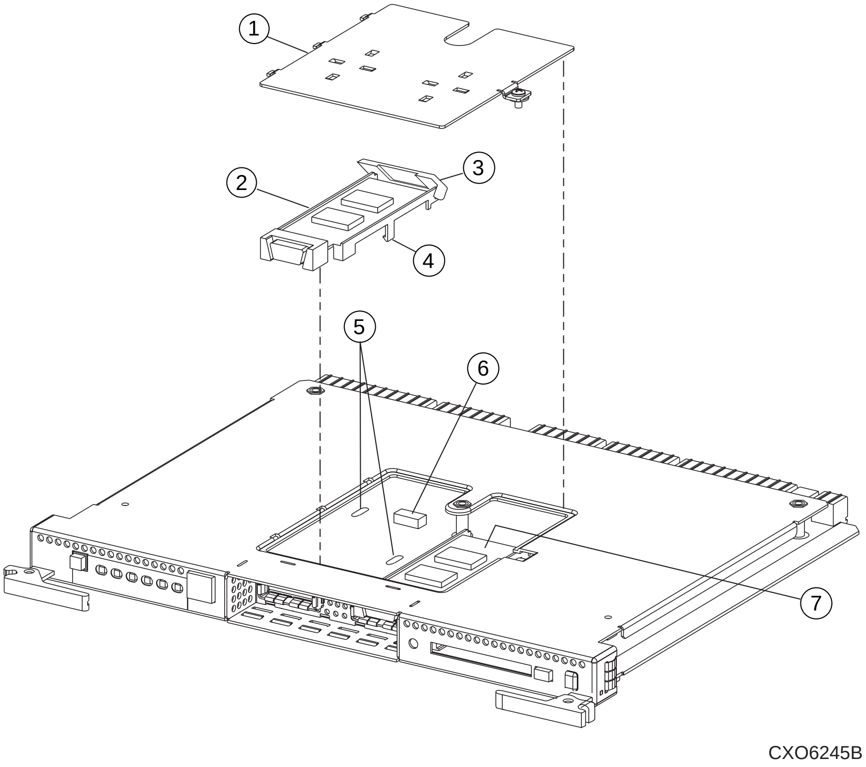
1
2
3
4
5
6
7
CXO6245B

Figure 6–3. GLM Connectors

Table 6–3 GLM Connectors

Location	Description
①	**Access Door**
②	**Port 1 GLM**
③	**Release Lever**
④	**Locking Tab**
⑤	**Guide Holes**
⑥	**GLM Connector**
⑦	**Port 2 GLM**

Power Verification and Addressing Module

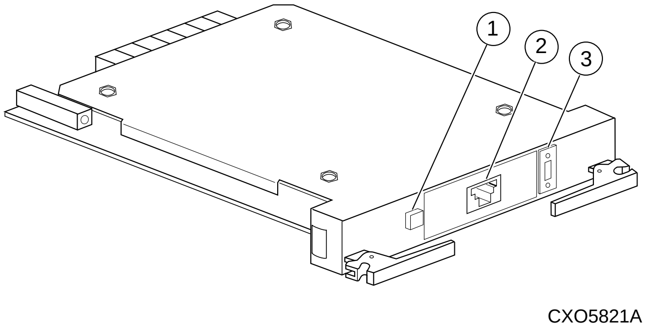

Figure 6–4. PVA Module Connectors and Switches

Table 6–4 PVA Connectors and Switches

Location	Description
①	**Standby power switch**
②	**Communications port**
③	**SCSI ID switch**

Environmental Monitoring Unit (EMU)

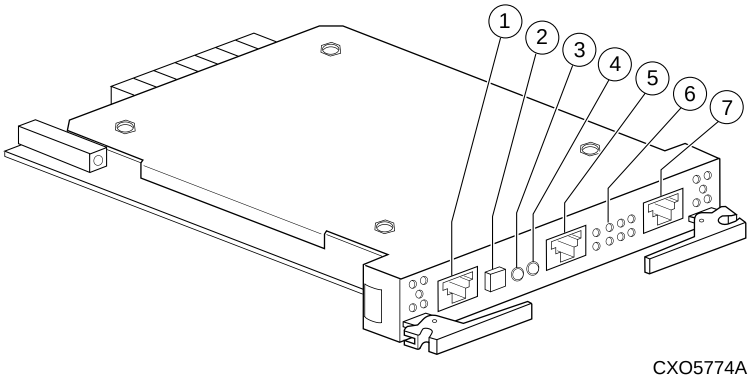

Figure 6–5. EMU Connectors, Switches, and LEDs

Table 6–5 EMU Connectors, Switches, and LEDs

Location	Description
①	**EMU communications connector (labeled IIC)**
②	**System fault LED and alarm control switch**
③	**Temperature fault LED**
④	**Power status LED**
⑤	**Maintenance terminal connector**
⑥	**Blower fault LEDs (8 LEDs)**
⑦	**EMU communications connector (labeled IIC)**

Chapter 7
Controller Specifications

This chapter contains physical, electrical, and environmental specifications for the HSG80 array controller.

Physical and Electrical Specifications for the Controller

Table 7–1 lists the physical and electrical specifications for the controller and cache modules.

Table 7–1 Controller Specifications

Hardware	Length	Width	Power	Current at +5 V	Current at +12 V
HSG80 Array Controller module	12 in	9.5 in	23.27 W	6.04 A	
Write-back Cache, 512 MB (Battery charging)	5.5 in	9.5 in	2.48 W 8.72 W		Cache idle, no battery 230 mA Cache running diagnostics, no battery 400 mA Cache idle, fully discharged battery 710 mA

Voltage measurements in Table 7–1 are nominal measurements (at +5 and +12 V). This table does not included tolerances.

Environmental Specifications

The HSG80 array controller is intended for installation in a Class A computer room environment.

The optimum operating environmental specifications are listed in Table 7–2; the maximum operating environmental specifications are listed in Table 7–3; and the maximum nonoperating environmental specifications are listed in Table 7–4. These are the same as for other Compaq storage devices.

Table 7–2 Optimum Operating Environmental Specifications

Condition	Specification
Temperature	+18 °C to +24 °C (+65 °F to +75 °F)
Temperature rate of change	11 °C (20 °F per hour)
Relative humidity	40% to 60% (noncondensing) with a step change of 10% or less (noncondensing)
Altitude	From sea level to 2400 m (8000 ft)
Air quality	Maximum particle count 0.5 micron or larger, not to exceed 500,000 particles per cubic foot of air
Inlet air volume	0.026 cubic m per second (50 cubic ft per minute)

Table 7–3 Maximum Operating Environmental Specifications

Condition	Specification
Temperature	+10 °C to +40 °C (+50 °F to +104 °F) Derate 1.8 °C for each 1000 m (1.0 °F for each 1000 ft) of altitude Maximum temperature gradient 11 °C/hour (20 °F/hour) ±2 °C/hour (4 °F/hour)
Relative humidity	10% to 90% (noncondensing) Maximum wet bulb temperature: 28 °C (82 °F) Minimum dew point: 2 °C (36 °F)

Table 7–4 Maximum Nonoperating Environmental Specifications

Condition	Specification
Temperature	-40 °C to +66 °C (-40 °F to +151 °F) (During transportation and associated short-term storage)
Relative Humidity	8% to 95% in original shipping container (noncondensing); otherwise, 50% (noncondensing)
Altitude	From -300 m (-1000 ft) to +3600 m (+12,000 ft) Mean Sea Level (MSL)

Appendix A
Spare Part Number Cross Reference

This appendix contains the spare part number cross reference list for the Compaq spare part numbers and the DIGITAL spare part numbers.

System Components Exploded View

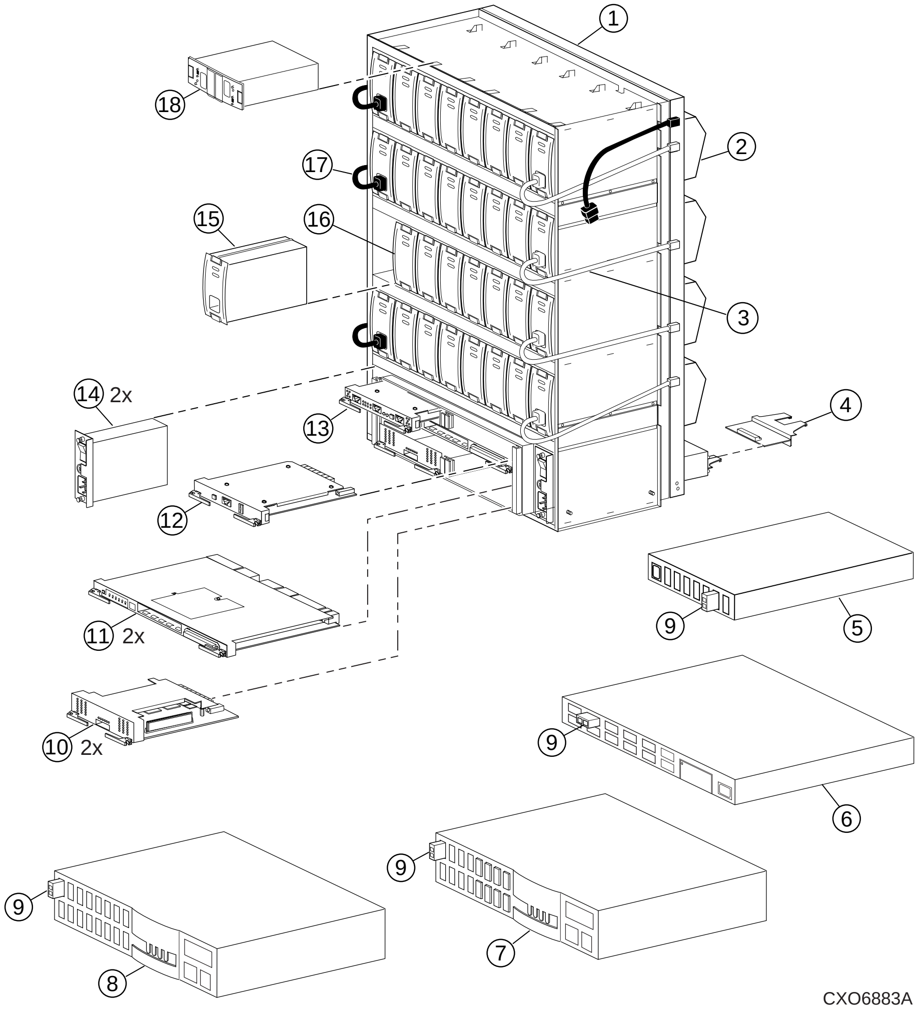
1
2
3
4
5
6
7
8
9
10 2x
11 2x
12
13
14 2x
15
16
17
18
CXO6883A

Figure A–1. The HSG80 Subsystem

Table A–1 The HSG80 Subsystem

Item	Description	Compaq Part Number	DIGITAL Part Number
1	BA370 rack-mountable enclosure	401914-001	DS-BA370-MA
2	Cooling fan, blue	400293-001	FC-BA35X-MK
	Cooling fan, gray	402602-001	FC-BA35X-ML
3	Power cable kit, white	401916-001	17-03718-10
4	I/O module, blue	400294-001	FC-BA35X-MN
	I/O module, gray	401911-001	70-32856-S2
5	Fibre Channel hub, 7-port	234454-001	FE-09061-01
6	Fibre Channel hub, 12-port	340858-001	30-50549-01
7	Fibre channel switch, 8-port	127660-001	30-56042-S1
8	Fibre channel switch, 16-port	127660-002	30-56042-S2
9	GBIC	234458-001	FE-09086-01
10	Cache module	400295-001	70-33256-S1
11	HSG80 controller	400285-001	70-33259-S1
12	PVA module	400299-001	FC-BA35X-EC
13	EMU	400286-001	FC-BA35X-EB
14	AC input module	400287-001	FC-BA35X-HE
15	180-watt power supply	400288-001	FC-BA35X-HH
16	Disk drive, 4 GB, 7200	402153-001	FC-RZ1CF-VW
	Disk drive, 9 GB, 7200	400289-001	FC-RZ1DF-VW
	Disk drive, 18 GB, 7200	400290-001	FC-RZ1EF-VW
	Disk drive, 9 GB, 10K	402154-001	FC-RZ1DD-VW
	Disk drive, 18 GB, 10K	402229-001	FC-RZ1ED-VW
17	Power cable, black	401915-001	17-03718-09
18	ECB, dual (shown)	400291-001	FC-HS35X-BD
	ECB, single (not shown)	400292-001	FC-HS35X-BC

HSG80 Array Controller

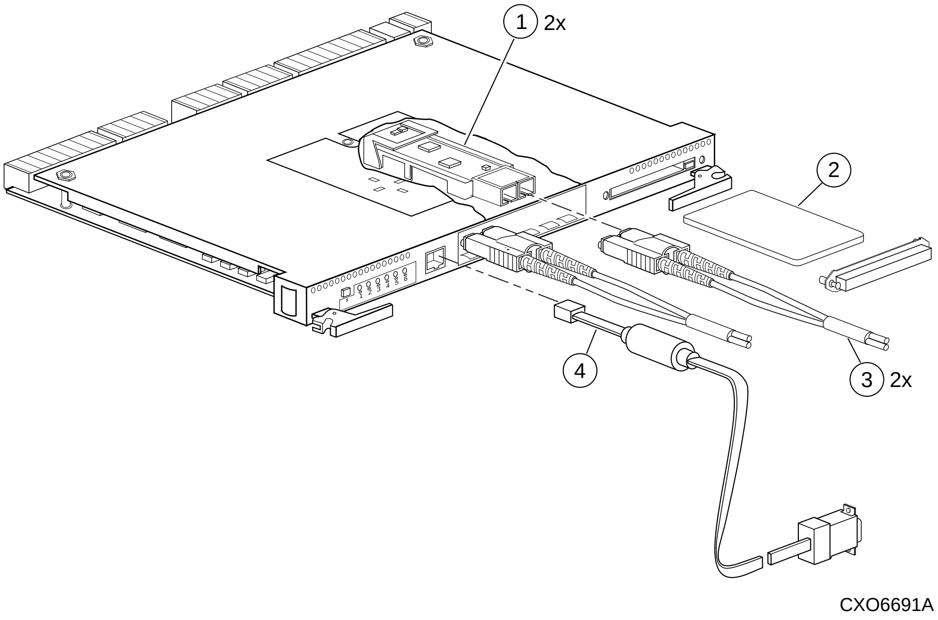
1 2x
2
3 2x
4
CXO6691A

Figure A–2. HSG80 Array Controller–Fibre Channel Optical Cabling

Table A–2 HSG80 Fibre Channel Array Controller

Item	Description	Compaq Part Number	DIGITAL Part Number
1	Gigabit Link Module (GLM)	402603-001	70-GLMS1-02
2	Program card	402604-001	BG-RFNUA-BA
3	Fibre channel optical cable, 2 meter	242796-001	17-04820-03
	Fibre channel optical cable, 5 meter	242796-002	17-04820-05
	Fibre channel optical cable, 15 meter	242796-003	17-04820-13
	Fibre channel optical cable, 30 meter	401937-001	17-04820-08
	Fibre channel optical cable, 50 meter	401938-001	17-04820-09
4	Maintenance port cable	402605-001	70-32873-02

Cache Module

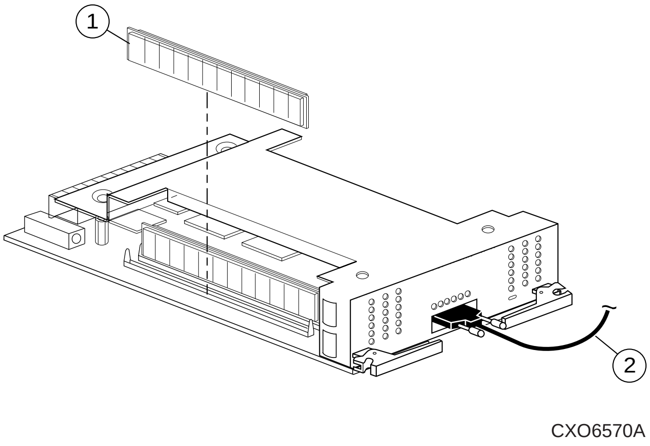

Figure A–3. Cache Module

Table A–3 Cache Module

Item	Description	Compaq Part Number	DIGITAL Part Number
1	DIMM, 32 MB	400296-001	70-DIMS1-01
	DIMM, 128 MB	400297-001	70-DIMS1-02
2	ECB Y cable for the BA370 Enclosure	400298-001	17-04479-03
	ECB Y cable for the Data Center Cabinet	401913-001	17-04479-04

Fibre Channel Switch

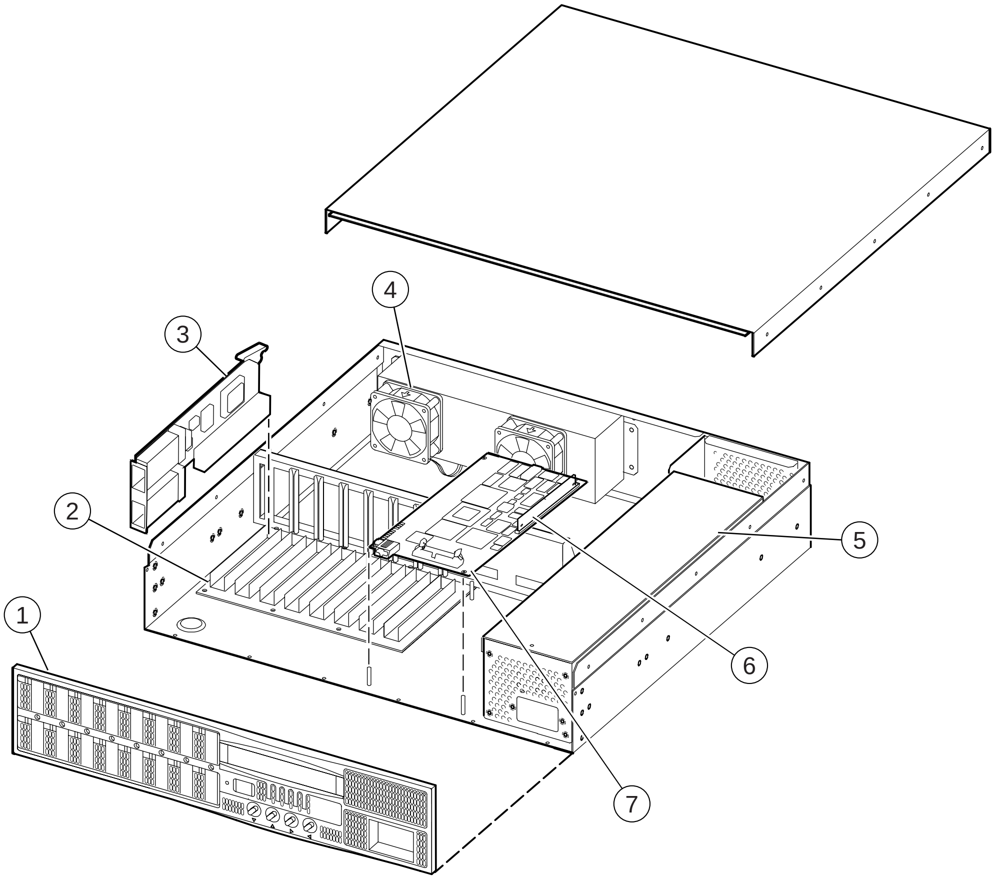
1
2
3
4
5
6
7
CXO6876A

Figure A–4. Switch Components

Table A–4 Fibre Channel Switch

Item	Description	Compaq Part Number	DIGITAL Part Number
1	Front panel assembly	128328-001	29-34468-01
2	Motherboard	401930-001	2934243-01
3	G-port interface card	401932-001	29-34245-01
4	Fan assembly	401934-001	29-34249-01
5	Power supply	401933-001	29-34246-01
6	Memory module	128329-001	20-47330-17
7	CPU card	401931-001	29-34244-01

Environmental Monitoring Unit (EMU)

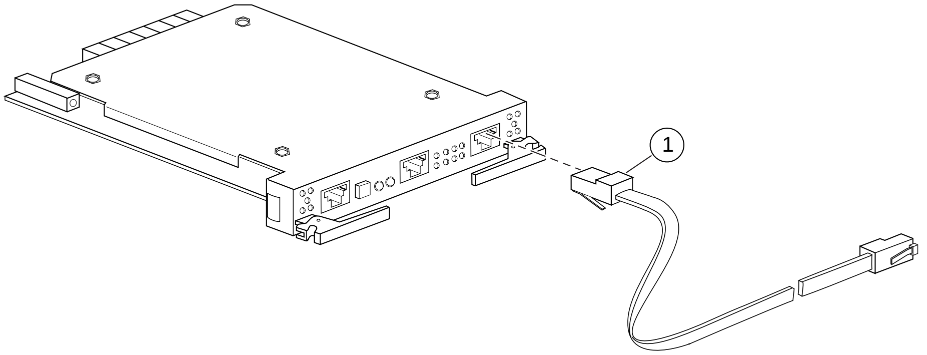

Figure A–5. EMU

Table A–5 EMU

Item	Description	Compaq Part Number	DIGITAL Part Number
1	EMU communication cable, 4 meter	401949-001	17-03194-04

Glossary

This glossary defines terms pertaining to the HSG80 Fibre Channel array controller. It is not a comprehensive glossary of computer terms.

8B/10B	A type of byte encoding and decoding to reduce errors in data transmission patented by the IBM Corporation. This process of encoding and decoding data for transmission has been adopted by ANSI.
adapter	A device that converts the protocol and hardware interface of one bus type into another without changing the function of the bus.
ACS	*See* array controller software.
AL_PA	*See* arbitrated loop physical address.
alias address	An AL_PA value recognized by an Arbitrated Loop port in addition to its assigned AL_PA.
ANSI	American National Standards Institute. An organization who develops standards used voluntarily by many manufacturers within the USA. ANSI is not a government agency.
arbitrate	A process of selecting one L_Port from a collection of several ports that request use of the arbitrated loop concurrently.
arbitrated loop	A loop type of topology where two or more ports can be interconnected, but only two ports at a time can communicate.
arbitrated loop physical address	Abbreviated AL_PA. A one-byte value used to identify a port in an Arbitrated Loop topology. The AL_PA value corresponds to bits 7:0 of the 24-bit Native Address Indentifier.
array controller	*See* controller.
array controller software	Abbreviated ACS. Software contained on a removable ROM program card that provides the operating system for the array controller.
asynchronous	Pertaining to events that are scheduled as the result of a signal asking for the event; pertaining to that which is without any specified time relation. *See also* synchronous.

autospare	A controller feature that automatically replaces a failed disk drive. To aid the controller in automatically replacing failed disk drives, you can enable the AUTOSPARE switch for the failedset causing physically replaced disk drives to be automatically placed into the spareset. Also called “autonewspare.”
bad block	A data block that contains a physical defect.
bad block replacement	Abbreviated BBR. A replacement routine that substitutes defect-free disk blocks for those found to have defects. This process takes place in the controller, transparent to the host.
backplane	The electronic printed circuit board into which you plug subsystem devices—for example, the SBB or power supply.
BBR	*See* bad block replacement.
BIST	*See* built-in self-test.
bit	A single binary digit having a value of either 0 or 1. A bit is the smallest unit of data a computer can process.
block	Also called a sector. The smallest collection of consecutive bytes addressable on a disk drive. In integrated storage elements, a block contains 512 bytes of data, error codes, flags, and the block’s address header.
bootstrapping	A method used to bring a system or device into a defined state by means of its own action. For example, a machine routine whose first few instructions are enough to bring the rest of the routine into the computer from an input device.
built-in self-test	A diagnostic test performed by the array controller software on the controller’s policy processor.
byte	A binary character string made up of 8 bits operated on as a unit.
cache memory	A portion of memory used to accelerate read and write operations.

CCITT	Acronym for Consultive Committee International Telephone and Telegraph. An international association that sets worldwide communication standards, recently renamed International Telecommunications Union (ITU).
CDU	Cable distribution unit. The power entry device for StorageWorks cabinets. The CDU provides the connections necessary to distribute power to the cabinet shelves and fans.
channel	An interface which allows high speed transfer of large amounts of data. Another term for a SCSI bus. *See also* SCSI.
chunk	A block of data written by the host.
chunk size	The number of data blocks, assigned by a system administrator, written to the primary RAIDset or stripeset member before the remaining data blocks are written to the next RAIDset or stripeset member.
CLCP	An abbreviation for code-load code-patch utility.
CLI	*See* command line interpreter.
coax	*See* coaxial cable.
coaxial cable	A two-conductor wire in which one conductor completely wraps the other with the two separated by insulation.
cold swap	A method of device replacement that requires the entire subsystem to be turned off before the device can be replaced. *See also* hot swap and warm swap.
command line interpreter	The configuration interface to operate the controller software.
configuration file	A file that contains a representation of a storage subsystem’s configuration.
container	1) Any entity that is capable of storing data, whether it is a physical device or a group of physical devices. (2) A virtual, internal controller structure representing either a single disk or a group of disk drives linked as a storageset. Stripesets and mirrorsets are examples of storageset containers the controller uses to create units.

controller	A hardware device that, with proprietary software, facilitates communications between a host and one or more devices organized in an array. HS family controllers are examples of array controllers.
copying	A state in which data to be copied to the mirrorset is inconsistent with other members of the mirrorset. *See also* normalizing.
copying member	Any member that joins the mirrorset after the mirrorset is created is regarded as a copying member. Once all the data from the normal member (or members) is copied to a normalizing or copying member, the copying member then becomes a normal member. *See also* normalizing member.
CSR	An acronym for control and status register.
DAEMON	Pronounced “demon.” A program usually associated with a UNIX system that performs a utility (housekeeping or maintenance) function without being requested or even known of by the user. A daemon is a diagnostic and execution monitor.
data center cabinet	A generic reference to large DIGITAL subsystem cabinets, such as the SW600-series and 800-series cabinets in which StorageWorks components can be mounted.
data striping	The process of segmenting logically sequential data, such as a single file, so that segments can be written to multiple physical devices (usually disk drives) in a round-robin fashion. This technique is useful if the processor is capable of reading or writing data faster than a single disk can supply or accept the data. While data is being transferred from the first disk, the second disk can locate the next segment.
device	*See* node and peripheral device.
differential I/O module	A 16-bit I/O module with SCSI bus converter circuitry for extending a differential SCSI bus. *See also* I/O module.
differential SCSI bus	A bus in which a signal’s level is determined by the potential difference between two wires. A differential bus is more robust and less subject to electrical noise than is a single-ended bus.
DIMM	Dual inline Memory Module.

dirty data	The write-back cached data that has not been written to storage media, even though the host operation processing the data has completed.
DMA	Direct Memory Access.
DOC	DWZZA-On-a-Chip. An NCR53C120 SCSI bus extender chip used to connect a SCSI bus in an expansion cabinet to the corresponding SCSI bus in another cabinet.
driver	A hardware device or a program that controls or regulates another device. For example, a device driver is a driver developed for a specific device that allows a computer to operate with the device, such as a printer or a disk drive.
dual-redundant configuration	A controller configuration consisting of two active controllers operating as a single controller. If one controller fails, the other controller assumes control of the failing controller’s devices.
dual-simplex	A communications protocol that allows simultaneous transmission in both directions in a link, usually with no flow control.
DUART	Dual universal asynchronous receiver and transmitter. An integrated circuit containing two serial, asynchronous transceiver circuits.
ECB	External cache battery. The unit that supplies backup power to the cache module in the event the primary power source fails or is interrupted.
ECC	Error checking and correction.
EDC	Error detection code.
EIA	The abbreviation for Electronic Industries Association. EIA is a standards organization specializing in the electrical and functional characteristics of interface equipment. Same as Electronic Industries Association.

EMU	Environmental monitoring unit. A unit that provides increased protection against catastrophic failures. Some subsystem enclosures include an EMU which works with the controller to detect conditions such as failed power supplies, failed blowers, elevated temperatures, and external air sense faults. The EMU also controls certain cabinet hardware including DOC chips, alarms, and fan speeds.
ESD	Electrostatic discharge. The discharge of potentially harmful static electrical voltage as a result of improper grounding.
extended subsystem	A subsystem in which two cabinets are connected to the primary cabinet.
external cache battery	*See* ECB.
F_Port	A port in a fabric where an N_Port or NL_Port may attach.
fabric	A group of interconnections between ports that includes a fabric element.
failedset	A group of failed mirrorset or RAIDset devices automatically created by the controller.
failover	The process that takes place when one controller in a dual-redundant configuration assumes the workload of a failed companion controller. Failover continues until the failed controller is repaired or replaced.
FC–AL	The Fibre Channel Arbitrated Loop standard.
FC–ATM	ATM AAL5 over Fibre Channel
FC–FG	Fibre Channel Fabric Generic Requirements
FG–FP	Fibre Channel Framing Protocol (HIPPI on FC)
FC-GS-1	Fibre Channel Generic Services-1
FC–GS-2	Fibre Channel Generic Services-2
FC–IG	Fibre Channel Implementation Guide

FC–LE	Fibre Channel Link Encapsulation (ISO 8802.2)
FC–PH	The Fibre Channel Physical and Signaling standard.
FC–SB	Fibre Channel Single Byte Command Code Set
FC–SW	Fibre Channel Switched Topology and Switch Controls
FCC	Federal Communications Commission. The federal agency responsible for establishing standards and approving electronic devices within the United States.
FCC Class A	This certification label appears on electronic devices that can only be used in a commercial environment within the United States.
FCC Class B	This certification label appears on electronic devices that can be used in either a home or a commercial environment within the United States.
FCP	The mapping of SCSI-3 operations to Fibre Channel.
FDDI	Fiber Distributed Data Interface. An ANSI standard for 100 megabaud transmission over fiber optic cable.
FD SCSI	The fast, narrow, differential SCSI bus with an 8-bit data transfer rate of 10 MB/s. *See also* FWD SCSI and SCSI.
fiber	A fiber or optical strand. Spelled **fibre** in Fibre Channel.
fiber optic cable	A transmission medium designed to transmit digital signals in the form of pulses of light. Fiber optic cable is noted for its properties of electrical isolation and resistance to electrostatic contamination.
FL_Port	A port in a fabric where N_Port or an NL_Port may be connected.
flush	The act of writing dirty data from cache to a storage media.
FMU	Fault management utility.
forced errors	A data bit indicating a corresponding logical data block contains unrecoverable data.

frame	An invisible unit used to transfer information in Fibre Channel.
FRU	Field replaceable unit. A hardware component that can be replaced at the customer’s location by DIGITAL service personnel or qualified customer service personnel.
full duplex (n)	A communications system in which there is a capability for 2-way transmission and acceptance between two sites at the same time.
full duplex (adj)	Pertaining to a communications method in which data can be transmitted and received at the same time.
FWD SCSI	A fast, wide, differential SCSI bus with a maximum 16-bit data transfer rate of 20 MB/s. *See also* SCSI and FD SCSI.
GLM	Gigabit link module
giga	A prefix indicating a billion (10^9) units, as in gigabaud or gigabyte.
gigabaud	An encoded bit transmission rate of one billion (10^9) bits per second.
gigabyte	A value normally associated with a disk drives storage capacity, meaning a billion (10^9) bytes. The decimal value 1024 is usually used for one thousand.
half-duplex (adj)	Pertaining to a communications system in which data can be either transmitted or received but only in one direction at one time.
hard address	The AL_PA which an NL_Port attempts to acquire during loop initialization.
HIPPI–FC	Fibre Channel over HIPPI
host	The primary or controlling computer to which a storage subsystem is attached.
host adapter	A device that connects a host system to a SCSI bus. The host adapter usually performs the lowest layers of the SCSI protocol. This function may be logically and physically integrated into the host system.

hot disks	A disk containing multiple hot spots. Hot disks occur when the workload is poorly distributed across storage devices which prevents optimum subsystem performance. *See also* hot spots.
hot spots	A portion of a disk drive frequently accessed by the host. Because the data being accessed is concentrated in one area, rather than spread across an array of disks providing parallel access, I/O performance is significantly reduced. *See als*o hot disks.
hot swap	A method of device replacement that allows normal I/O activity on a device’s bus to remain active during device removal and insertion. The device being removed or inserted is the only device that cannot perform operations during this process. *See also* cold swap and warm swap.
IBR	Initial Boot Record.
ILF	Illegal function.
INIT	Initialize input and output.
initiator	A SCSI device that requests an I/O process to be performed by another SCSI device, namely, the SCSI target. The controller is the initiator on the device bus. The host is the initiator on the host bus.
instance code	A four-byte value displayed in most text error messages and issued by the controller when a subsystem error occurs. The instance code indicates when during software processing the error was detected.
interface	A set of protocols used between components, such as cables, connectors, and signal levels.
I/O	Refers to input and output functions.
I/O driver	The set of code in the kernel that handles the physical I/O to a device. This is implemented as a fork process. Same as driver.
I/O interface	*See* interface.
I/O module	A 16-bit SBB shelf device that integrates the SBB shelf with either an 8-bit single ended, 16-bit single-ended, or 16-bit differential SCSI bus.

I/O operation	The process of requesting a transfer of data from a peripheral device to memory (or visa versa), the actual transfer of the data, and the processing and overlaying activity to make both of those happen.
IPI	Intelligent Peripheral Interface. An ANSI standard for controlling peripheral devices by a host computer.
IPI-3 Disk	Intelligent Peripheral Interface Level 3 for Disk
IPI-3 Tape	Intelligent Peripheral Interface Level 3 for Tape
JBOD	Just a bunch of disks. A term used to describe a group of single-device logical units.
kernel	The most privileged processor access mode.
LBN	Logical Block Number.
L_port	A node or fabric port capable of performing arbitrated loop functions and protocols. NL_Ports and FL_Ports are loop-capable ports.
LED	Light Emitting Diode.
link	A connection between two Fibre Channel ports consisting of a transmit fibre and a receive fibre.
logical block number	*See* LBN.
local connection	A connection to the subsystem using either its serial maintenance port or the host’s SCSI bus. A local connection enables you to connect to one subsystem controller within the physical range of the serial or host SCSI cable.
local terminal	A terminal plugged into the EIA-423 maintenance port located on the front bezel of the controller. *See also* maintenance terminal.
logical bus	A single-ended bus connected to a differential bus by a SCSI bus signal converter.

logical unit	A physical or virtual device addressable through a target ID number. LUNs use their target's bus connection to communicate on the SCSI bus.
logical unit number	A value that identifies a specific logical unit belonging to a SCSI target ID number. A number associated with a physical device unit during a task's I/O operations. Each task in the system must establish its own correspondence between logical unit numbers and physical devices.
logon	Also called login. A procedure whereby a participant, either a person or network connection, is identified as being an authorized network participant.
loop	*See* arbitrated loop.
loop_ID	A seven-bit value numbered contiguously from zero to 126-decimal and represent the 127 legal AL_PA values on a loop (not all of the 256 hex values are allowed as AL_PA values per FC-AL.
loop tenancy	The period of time between the following events: when a port wins loop arbitration and when the port returns to a monitoring state.
L_Port	A node or fabric port capable of performing Arbitrated Loop functions and protocols. NL_Ports and FL_Ports are loop-capable ports.
LRU	Least recently used. A cache term used to describe the block replacement policy for read cache.
Mbps	Approximately one million (10^6) bits per second—that is, megabits per second.
MBps	Approximately one million (10^6) bytes per second—that is, megabytes per second.
maintenance terminal	An EIA-423-compatible terminal used with the controller. This terminal is used to identify the controller, enable host paths, enter configuration information, and check the controller's status. The maintenance terminal is not required for normal operations. *See also* local terminal.
member	A container that is a storage element in a RAID array.

metadata	The data written to a disk for the purposes of controller administration. Metadata improves error detection and media defect management for the disk drive. It is also used to support storageset configuration and partitioning. Nontransportable disks also contain metadata to indicate they are uniquely configured for StorageWorks environments. Metadata can be thought of as “data about data.”
mirroring	The act of creating an exact copy or image of data.
mirrorset	*See* RAID level 1.
MIST	Module Integrity Self-Test.
N_port	A port attached to a node for use with point-to-point topology or fabric topology.
NL_port	A port attached to a node for use in all three topologies.
network	A data communication, a configuration in which two or more terminals or devices are connected to enable information transfer.
node	In data communications, the point at which one or more functional units connect transmission lines.
Non-L_Port	A Node of Fabric port that is not capable of performing the Arbitrated Loop functions and protocols. N_Ports and F_Ports loop-capable ports.
non-participating mode	A mode within an L_Port that inhibits the port from participating in loop activities. L_Ports in this mode continue to retransmit received transmission words but are not permitted to arbitrate or originate frames. An L_Port in non-participating mode may or may not have an AL_PA. *See also* participating mode.
nominal membership	The desired number of mirrorset members when the mirrorset is fully populated with active devices. If a member is removed from a mirrorset, the actual number of members may fall below the “nominal” membership.
node	In data communications, the point at which one or more functional units connect transmission lines. In fibre channel, a device that has at least one N_Port or NL_Port.

nonredundant controller configuration	(1) A single controller configuration. (2) A controller configuration that does not include a second controller.
normal member	A mirrorset member that, block-for-block, contains the same data as other normal members within the mirrorset. Read requests from the host are always satisfied by normal members.
normalizing	Normalizing is a state in which, block-for-block, data written by the host to a mirrorset member is consistent with the data on other normal and normalizing members. The normalizing state exists only after a mirrorset is initialized. Therefore, no customer data is on the mirrorset.
normalizing member	A mirrorset member whose contents is the same as all other normal and normalizing members for data that has been written since the mirrorset was created or lost cache data was cleared. A normalizing member is created by a normal member when either all of the normal members fail or all of the normal members are removed from the mirrorset. *See also* copying member.
NVM	Non-Volatile Memory. A type of memory where the contents survive power loss. Also sometimes referred to as NVMEM.
OCP	Operator control panel. The control or indicator panel associated with a device. The OCP is usually mounted on the device and is accessible to the operator.
other controller	The controller in a dual-redundant pair that is connected to the controller serving your current CLI session. *See also* this controller.
outbound fiber	One fiber in a link that carries information away from a port.
parallel data transmission	A data communication technique in which more than one code element (for example, bit) of each byte is sent or received simultaneously.
parity	A method of checking if binary numbers or characters are correct by counting the ONE bits. In odd parity, the total number of ONE bits must be odd; in even parity, the total number of ONE bits must be even.
parity bit	A binary digit added to a group of bits that checks to see if errors exist in the transmission.

parity check	A method of detecting errors when data is sent over a communications line. With even parity, the number of ones in a set of binary data should be even. With odd parity, the number of ones should be odd.
participating mode	A mode within an L_Port that allows the port to participate in loop activities. A port must have a valid AL_PA to be in participating mode.
PCM	Polycenter Console Manager.
PCMCIA	Personal Computer Memory Card Industry Association. An international association formed to promote a common standard for PC card-based peripherals to be plugged into notebook computers. The card commonly known as a PCMCIA card is about the size of a credit card.
parity	A method of checking if binary numbers or characters are correct by counting the ONE bits. In odd parity, the total number of ONE bits must be odd; in even parity, the total number of ONE bits must be even. Parity information can be used to correct corrupted data. RAIDsets use parity to improve the availability of data.
parity bit	A binary digit added to a group of bits that checks to see if there are errors in the transmission.
parity RAID	*See* RAIDset.
partition	A logical division of a container, represented to the host as a logical unit.
peripheral device	Any unit, distinct from the CPU and physical memory, that can provide the system with input or accept any output from it. Terminals, printers, tape drives, and disks are peripheral devices.
point-to-point connection	A network configuration in which a connection is established between two, and only two, terminal installations. The connection may include switching facilities.
port	(1) In general terms, a logical channel in a communications system. (2) The hardware and software used to connect a host controller to a communications bus, such as a SCSI bus or serial bus.

	Regarding the controller, the port is (1) the logical route for data in and out of a controller that can contain one or more channels, all of which contain the same type of data. (2) The hardware and software that connects a controller to a SCSI device.
port_name	A 64-bit unique identifier assigned to each Fibre Channel port. The Port_Name is communicated during the logon and port discovery process.
preferred address	The AL_PA which an NL_Port attempts to acquire first during initialization.
primary cabinet	The primary cabinet is the subsystem enclosure that contains the controllers, cache modules, external cache batteries, and the PVA module.
private NL_Port	An NL_Port which does not attempt login with the fabric and only communicates with NL_Ports on the same loop.
public NL_Port	An NL_Port that attempts login with the fabric and can observe the rules of either public or private loop behavior. A public NL_Port may communicate with both private and public NL_Ports.
program card	The PCMCIA card containing the controller’s operating software.
protocol	The conventions or rules for the format and timing of messages sent and received.
PTL	Port-Target-LUN. The controller’s method of locating a device on the controller’s device bus.
PVA module	Power Verification and Addressing module.
quiesce	The act of rendering bus activity inactive or dormant. For example, “quiesce the SCSI bus operations during a device warm-swap.”
RAID	Redundant Array of Independent Disks. Represents multiple levels of storage access developed to improve performance or availability or both.
RAID level 0	A RAID storageset that stripes data across an array of disk drives. A single logical disk spans multiple physical disks, allowing parallel data processing for increased I/O performance. While the performance characteristics of RAID level 0 is excellent, this RAID level is the only one that does not

	provide redundancy. Raid level 0 storagesets are sometimes referred to as stripesets.
RAID level 0+1	A RAID storageset that stripes data across an array of disks (RAID level 0) and mirrors the striped data (RAID level 1) to provide high I/O performance and high availability. This RAID level is alternatively called a striped mirrorset. Raid level 0+1 storagesets are sometimes referred to as striped mirrorsets.
RAID level 1	A RAID storageset of two or more physical disks that maintains a complete and independent copy of the entire virtual disk's data. This type of storageset has the advantage of being highly reliable and extremely tolerant of device failure. Raid level 1 storagesets are sometimes referred to as mirrorsets.
RAID level 3	A RAID storageset that transfers data parallel across the array's disk drives a byte at a time, causing individual blocks of data to be spread over several disks serving as one enormous virtual disk. A separate redundant check disk for the entire array stores parity on a dedicated disk drive within the storageset. *See also* RAID level 5.
RAID Level 5	A RAID storageset that, unlike RAID level 3, stores the parity information across all of the disk drives within the storageset. *See also* RAID level 3.
RAID level 3/5	A DIGITAL-developed RAID storageset that stripes data and parity across three or more members in a disk array. A RAIDset combines the best characteristics of RAID level 3 and RAID level 5. A RAIDset is the best choice for most applications with small to medium I/O requests, unless the application is write intensive. A RAIDset is sometimes called parity RAID. Raid level 3/5 storagesets are sometimes referred to as RAIDsets.
RAIDset	*See* RAID level 3/5.
RAM	Random access memory.
read ahead caching	A caching technique for improving performance of synchronous sequential reads by prefetching data from disk.

read caching	A cache management method used to decrease the subsystem’s response time to a read request by allowing the controller to satisfy the request from the cache memory rather than from the disk drives.
reconstruction	The process of regenerating the contents of a failed member’s data. The reconstruct process writes the data to a spareset disk and then incorporates the spareset disk into the mirrorset, striped mirrorset, or RAIDset from which the failed member came. *See also* regeneration.
reduced	Indicates that a mirrorset or RAIDset is missing one member because the member has failed or has been physically removed.
redundancy	The provision of multiple interchangeable components to perform a single function in order to cope with failures and errors. A RAIDset is considered to be redundant when user data is recorded directly to one member and all of the other members include associated parity information.
regeneration	(1) The process of calculating missing data from redundant data. (2) The process of recreating a portion of the data from a failing or failed drive using the data and parity information from the other members within the storageset. The regeneration of an entire RAIDset member is called reconstruction. *See also* reconstruction.
request rate	The rate at which requests are arriving at a servicing entity.
RFI	Radio frequency interference. The disturbance of a signal by an unwanted radio signal or frequency.
replacement policy	The policy specified by a switch with the SET FAILEDSET command indicating whether a failed disk from a mirrorset or RAIDset is to be automatically replaced with a disk from the spareset. The two switch choices are AUTOSPARE and NOAUTOSPARE.
SBB	StorageWorks building block. (1) A modular carrier plus the interface required to mount the carrier into a standard StorageWorks shelf. (2) any device conforming to shelf mechanical and electrical standards installed in a 3.5-inch or 5.25-inch carrier, whether it is a storage device or power supply.
SCSI	Small computer system interface. (1) An ANSI interface standard defining the physical and electrical parameters of a parallel I/O bus used to connect

	initiators to devices. (2) a processor-independent standard protocol for system-level interfacing between a computer and intelligent devices including hard drives, floppy disks, CD-ROMs, printers, scanners, and others.
SCSI-A cable	A 50-conductor (25 twisted-pair) cable generally used for single-ended, SCSI-bus connections.
SCSI bus signal converter	Sometimes referred to as an adapter. (1) A device used to interface between the subsystem and a peripheral device unable to be mounted directly into the SBB shelf of the subsystem. (2) a device used to connect a differential SCSI bus to a single-ended SCSI bus. (3) A device used to extend the length of a differential or single-ended SCSI bus. *See also* I/O module.
SCSI device	(1) A host computer adapter, a peripheral controller, or an intelligent peripheral that can be attached to the SCSI bus. (2) Any physical unit that can communicate on a SCSI bus.
SCSI device ID number	A bit-significant representation of the SCSI address referring to one of the signal lines, numbered 0 through 7 for an 8-bit bus, or 0 through 15 for a 16-bit bus. *See also* target ID number.
SCSI ID number	The representation of the SCSI address that refers to one of the signal lines numbered 0 through 15.
SCSI-P cable	A 68-conductor (34 twisted-pair) cable generally used for differential bus connections.
SCSI port	(1) Software: The channel controlling communications to and from a specific SCSI bus in the system. (2) Hardware: The name of the logical socket at the back of the system unit to which a SCSI device is connected.
serial transmission	A method transmission in which each bit of information is sent sequentially on a single channel rather than simultaneously as in parallel transmission.
service rate	The rate at which an entity is able to service requests For example, the rate at which an Arbitrated Loop is able to service arbitrated requests.
signal converter	*See* SCSI bus signal converter.

SIMM	Single Inline Memory Module.
single ended I/O module	A 16-bit I/O module. *See also* I/O module.
single-ended SCSI bus	An electrical connection where one wire carries the signal and another wire or shield is connected to electrical ground. Each signal's logic level is determined by the voltage of a single wire in relation to ground. This is in contrast to a differential connection where the second wire carries an inverted signal.
spareset	A collection of disk drives made ready by the controller to replace failed members of a storageset.
storage array	An integrated set of storage devices.
storage array subsystem	*See* storage subsystem.
storageset	(1) A group of devices configured with RAID techniques to operate as a single container. (2) Any collection of containers, such as stripesets, mirrorsets, striped mirrorsets, and RAIDsets.
storage subsystem	The controllers, storage devices, shelves, cables, and power supplies used to form a mass storage subsystem.
storage unit	The general term that refers to storagesets, single-disk units, and all other storage devices that are installed in your subsystem and accessed by the host. A storage unit can be any entity that is capable of storing data, whether it is a physical device or a group of physical devices.
StorageWorks	A family of DIGITAL modular data storage products that allow customers to design and configure their own storage subsystems. Components include power, packaging, cabling, devices, controllers, and software. Customers can integrate devices and array controllers in StorageWorks enclosures to form storage subsystems. StorageWorks systems include integrated SBBs and array controllers to form storage subsystems. System-level enclosures to house the shelves and standard mounting devices for SBBs are also included.

stripe	The data divided into blocks and written across two or more member disks in an array.
striped mirrorset	*See* RAID level 0+1.
stripeset	*See* RAID level 0.
stripe size	The stripe capacity as determined by *n*–1 times the chunksize, where *n* is the number of RAIDset members.
striping	The technique used to divide data into segments, also called chunks. The segments are striped, or distributed, across members of the stripeset. This technique helps to distribute hot spots across the array of physical devices to prevent hot spots and hot disks. Each stripeset member receives an equal share of the I/O request load, improving performance.
surviving controller	The controller in a dual-redundant configuration pair that serves its companion's devices when the companion controller fails.
switch	A method that controls the flow of functions and operations in software.
synchronous	Pertaining to a method of data transmission which allows each event to operate in relation to a timing signal. *See also* asynchronous.
tape	A storage device supporting sequential access to variable sized data records.
target	(1) A SCSI device that performs an operation requested by an initiator. (2) Designates the target identification (ID) number of the device.
this controller	The controller that is serving your current CLI session through a local or remote terminal. *See also* other controller.
topology	An interconnection scheme that allows multiple Fibre Channel ports to communicate with each other. For example, point-to-point, Arbitrated Loop, and switched fabric are all Fibre Channel topologies.
transfer data rate	The speed at which data may be exchanged with the central processor, expressed in thousands of bytes per second.

ULP	Upper Layer Protocol.
ULP process	A function executing within a Fibre Channel node which conforms to the Upper Layer Protocol (ULP) requirements when interacting with other ULP processes.
Ultra-SCSI bus	A wide, Fast-20 SCSI bus.
unit	A container made accessible to a host. A unit may be created from a single disk drive or tape drive. A unit may also be created from a more complex container such as a RAIDset. The controller supports a maximum of eight units on each target. *See also* target and target ID number.
unwritten cached data	Sometimes called unflushed data. *See* dirty data.
UPS	Uninterruptible power supply. A battery-powered power supply guaranteed to provide power to an electrical device in the event of an unexpected interruption to the primary power supply. Uninterruptible power supplies are usually rated by the amount of voltage supplied and the length of time the voltage is supplied.
VHDCI	Very high-density-cable interface. A 68-pin interface. Required for Ultra-SCSI connections.
virtual terminal	A software path from an operator terminal on the host to the controller's CLI interface, sometimes called a host console. The path can be established via the host port on the controller (using HSZterm) or via the maintenance port through an intermediary host.
VTDPY	An abbreviation for Virtual Terminal Display Utility.
warm swap	A device replacement method that allows the complete system remains online during device removal or insertion. The system bus may be halted, or quiesced, for a brief period of time during the warm-swap procedure.
Worldwide name	A unique 64-bit number assigned to a subsystem by the Institute of Electrical and Electronics Engineers (IEEE) and set by DIGITAL manufacturing prior to shipping. This name is referred to as the node ID within the CLI.

write-back caching	A cache management method used to decrease the subsystem’s response time to write requests by allowing the controller to declare the write operation “complete” as soon as the data reaches its cache memory. The controller performs the slower operation of writing the data to the disk drives at a later time.
write-through caching	A cache management method used to decrease the subsystem’s response time to a read. This method allows the controller to satisfy the request from the cache memory rather than from the disk drives.
write hole	The period of time in a RAID level 1 or RAID level 5 write operation when an opportunity emerges for undetectable RAIDset data corruption. Write holes occur under conditions such as power outages, where the writing of multiple members can be abruptly interrupted. A battery backed-up cache design eliminates the write hole because data is preserved in cache and unsuccessful write operations can be retried.
write-through cache	A cache management technique for retaining host write requests in read cache. When the host requests a write operation, the controller writes data directly to the storage device. This technique allows the controller to complete some read requests from the cache, greatly improving the response time to retrieve data. The operation is complete only after the data to be written is received by the target storage device. This cache management method may update, invalidate, or delete data from the cache memory accordingly, to ensure that the cache contains the most current data.

Index

A

AC input module
  part number, 1–3, A–3
Adding
  DIMMs, 3–22
Adding cache memory, 3–22
Adding DIMMs, 3–22
Array Controller. *See* Controller
ASC/ASCQ codes, 5–112
ASC_ASCQ codes, 4–40

B

BA370 enclosure
  ECB Y cable, 1–6, A–6
BA370 rack-mountable enclosure
  part number, 1–3, A–3
Backup power source
  enabling write-back caching, 4–18
Battery hysteresis, 4–3

C

Cables
  ECB Y cable part numbers
    BA370 enclosure, 1–6, A–6
    data center cabinet, 1–6, A–6
Cache module
  companion cache module, 1–6, A–6
  general description, 1–6, A–6
  illustration of parts, 1–6, A–6
  installing
    dual-redundant controller configuration, 2–37
    single-controller configuration, 2–17
  part number, 1–3, A–3
  removing
    dual-redundant controller configuration, 2–34
    single-controller configuration, 2–16
  replacing
    dual-redundant controller configuration, 2–34
    single-controller configuration, 2–16
  replacing cache modules with FRUTIL, 4–67
Cache policies
  fault-tolerance for write-back caching, 4–18
Caution, defined, xx
Change volume serial number utility. *See* CHVSN utility
Charging diagnostics
  battery hysteresis, 4–3
  general description, 4–2
Checking fibre channel link errors, 4–54
CHVSN utility
  general description, 4–68
CLCP
  downloading new software, 3–4
  patches
    installing, 3–8
CLCP utility
  general description, 4–66
Cleaning instructions
  fibre channel optical cable, 2–6
CLI event reporting
  no controller termination, 4–36
Clone utility
  general description, 4–67

Code load and code patch utility. *See* CLCP utility
Codes
  ASC/ASCQ, 5–112
  ASC_ASCQ, 4–40
  component identifier codes, 5–109
  device_type, 4–40
  event codes, 4–40
  event threshold codes, 5–111
  instance, 4–40, 5–24 to 5–52
  last_failure, 4–40
  last-failure, ?? to 5–101
  repair action, 5–102 to 5–107
  repair_action, 4–40
  structure of events and last-failures, 4–41
  translating, 4–40
  types of, 4–40
Component codes, 4–40
Component identifier codes, 5–109
CONFIG utility
  general description, 4–64
Configuration
  map of devices in subsystem, 4–48
  upgrading to dual-redundant controller, 3–17
Configuration utility. *See* CONFIG utility
Connecting
  local connection to the controller, 2–3
  PC connection to the controller, 2–3
  terminal connection to the controller, 2–3
Controller
  "this" and "other" defined, xix
  checking communication with devices, 4–47
  checking communication with host, 4–46
  checking transfer rate with host, 4–46
  ECB diagnostics, 4–2
  Fibre channel optical cabling
    part numbers of parts used in configuring, 1–5, A–5
    parts used in configuring, 1–5, A–5
  fibre channel optical cabling
    illustration of parts, 1–4, A–4
  general description, 1–3, A–3
  installing
    dual-redundant controller configuration, 2–31
    single-controller configuration, 2–14
  local connection, 2–3
  patching controller software with the CLCP utility, 4–66
  removing
    dual-redundant controller configuration, 2–28
    single-controller configuration, 2–12
  replacing
    dual-redundant controller configuration, 2–28
    single-controller configuration, 2–12
  replacing a failed controller with FRUTIL, 4–67
  self-test, 4–2
  shutting down, 2–8
  upgrading software, 3–2
Controller and its cache module
  installing
    dual-redundant controller configuration, 2–24
  removing
    dual-redundant controller configuration, 2–20

replacing
    dual-redundant controller configuration, 2–20
    single-controller configuration, 2–12
Controller termination
  events, 4–25
    flashing OCP, 4–26
    last failure reporting, 4–34
    solid OCP, 4–28
Controller, cache module, and ECB
  upgrade installation, 3–17
Conventions
  typographical, xix
  warnings, cautions, tips, notes, xix
Cooling fan
  part number, 1–3, A–3

D

DAEMON tests, 4–2
Data
  duplicating with the Clone utility, 4–67
Data center cabinet
  ECB Y cable, 1–6, A–6
Data patterns for DILX write test, 4–62
Deleting
  patches, 3–8, 3–10
  software patches, 3–8, 3–10
Describing event codes, 4–40
Device ports
  checking status, 4–50
Device statistics utility. *See* DSTAT utility
Device_type codes, 4–40
Devices
  adding with the CONFIG utility, 4–64
  checking communication with controller, 4–47
  checking I/O, 4–48
  checking port status, 4–50
  checking status, 4–48
  exercising, 4–59
  finding, 4–59
  generating a new volume serial number with the CHVSN utility, 4–68
  mapping in subsystem, 4–48
  renaming the volume serial number with the CHVSN utility, 4–68
  replacing, 2–64
  testing read and write capability, 4–61
  testing read capability, 4–59
  upgrading firmware, 3–14
Diagnostics
  ECB charging, 4–2
DILX, 4–59
DIMMs
  installing, 2–59
    dual-redundant controller configuration, 2–59
    single-configuration controller, 2–59
  removing, 2–59
    dual-redundant controller configuration, 2–59
    single-configuration controller, 2–59
  replacing, 2–58
  replacing in a dual-redundant controller configuration, 2–58
  replacing in a single-configuration controller, 2–58
Disabling the ECBs
  shutting down the subsystem, 2–8
Disk drive. *See* devices
Disk drives
  adding with the CONFIG utility, 4–64

- generating a new volume serial number with the CHVSN utility, 4–68
- part number, 1–3, A–3
- renaming the volume serial number with the CHVSN utility, 4–68

Displaying
- current FMU settings, 4–44
- event codes, 4–40
- last-failure codes, 4–38
- memory-system failures, 4–38

Documentation, related, xxii

Downloading
- software, 3–4

Dual-battery ECB
- part number, 1–3, A–3

Dual-redundant controller configuration
- installing
  - cache module, 2–37
  - controller, 2–31
  - controller and its cache module, 2–24
  - DIMMs, 2–59
  - GLM, 2–48
- removing
  - cache module, 2–34
  - controller, 2–28
  - controller and its cache module, 2–20
  - DIMMs, 2–59
  - GLM, 2–46 to 2–47
- replacing
  - cache module, 2–34
  - controller, 2–28
  - controller and its cache module, 2–20
  - DIMMs, 2–58
  - ECB, 2–41
  - ECB with cabinet powered off, 2–43
  - ECB with cabinet powered on, 2–42
  - I/O module, 2–52
  - PCMCIA card, 2–62
- replacing modules, 2–19
- upgrading from single controller, 3–17

E

ECB
- battery hysteresis, 4–3
- diagnostics, 4–2
- disabling
  - shutting down the subsystem, 2–8
- dual-battery ECB part number, 1–3, A–3
- dual-redundant controller configuration
  - replacing with cabinet powered off, 2–43
  - replacing with cabinet powered on, 2–42
- enabling
  - shutting down the subsystem, 2–8
- replacing, 2–41
- replacing ECBs with FRUTIL, 4–67
- replacing in a dual-redundant controller configuration, 2–41
- replacing in a single-configuration controller, 2–41
- replacing with cabinet powered off, 2–43
- replacing with cabinet powered on, 2–42
- single-battery ECB part number, 1–3, A–3

- single-controller configuration
  - replacing with cabinet powered off, 2–43
  - replacing with cabinet powered on, 2–42

ECB Y cable
- BA370 enclosure
  - part numbers, 1–6, A–6
- data center cabinet
  - part numbers, 1–6, A–6

Electrostatic discharge precautions, xvi, 2–2, 3–1

EMU
- part number, 1–3, A–3

Enabling the ECBs
- shutting down the subsystem, 2–8

Event codes
- list, 5–111
- structure, 4–41
- translating, 4–40
- types, 4–40

Event threshold codes, 4–40

Events
- controller termination, 4–25
  - flashing OCP, 4–26
  - last failure reporting, 4–34
  - solid OCP, 4–28
- no controller termination, 4–34
  - CLI event reporting, 4–36
  - spontaneous event log, 4–35

Exercising drives and units, 4–59

F

Fault remedy table, 4–6

Fault-tolerance for write-back caching
- general description, 4–18
- nonvolatile memory, 4–18

Fiber cable
- installing, 2–61
- installing in a dual-redundant controller configuration, 2–61
- installing in a single-configuration controller, 2–61
- removing, 2–61
- removing in a dual-redundant controller configuration, 2–61
- removing in a single-configuration controller, 2–61
- replacing, 2–61
- replacing in a dual-redundant controller configuration, 2–61
- replacing in a single-configuration controller, 2–61

Fibre channel
- link error, 4–54

Fibre channel host status display, 4–54

Fibre Channel hub
- part number, 1–3, A–3

Fibre channel optical cable
- cleaning instructions, 2–6

Fibre Channel switch
- part number, 1–3, A–3

Field Replacement utility. *See* FRUTIL

Finding
- devices, 4–59

Firmware
- upgrading with HSUTIL, 3–14

Flashing OCP
- events
  - controller termination, 4–26

FMU
- displaying current display settings, 4–44
- enabling event logging, 4–42

- enabling repair-action logging, 4–42
- enabling timestamp, 4–43
- enabling verbose logging, 4–42
- general description, 4–37
- interpreting last-failures, 4–37
- interpreting memory-system failures, 4–37
- logging last-failure codes, 4–42
- setting display for, 4–41
- translating event codes, 4–40

FRUTIL
- general description, 4–67

G

GBIC
- part number, 1–3, A–3

GLM
- installing, 2–48
- installing in a dual-redundant controller configuration, 2–48
- installing in a single-configuration controller, 2–48
- removing, 2–47
- removing in a dual-redundant controller configuration, 2–47
- removing in a single-configuration controller, 2–47
- replacing, 2–46
- replacing in a dual-redundant controller configuration, 2–46
- replacing in a single-configuration controller, 2–46

H

History, revision of this manual, xxiii

Host
- checking transfer rate to controller, 4–46

Host port
- checking status, 4–46

HSG80 Array Controller. *See* Controller

HSUTIL
- general description, 4–65
- upgrading device firmware, 3–14

Hub
- installing, 2–61
- installing in a dual-redundant controller configuration, 2–61
- installing in a single-configuration controller, 2–61
- removing, 2–61
- removing in a dual-redundant controller configuration, 2–61
- removing in a single-configuration controller, 2–61
- replacing, 2–61
- replacing in a dual-redundant controller configuration, 2–61
- replacing in a single-configuration controller, 2–61

Hysteresis. *See* Battery hysteresis

I

I/O
- checking to devices, 4–48
- checking to host, 4–46
- checking to units, 4–51
- logging I/O activity with DSTAT, 4–68

I/O module
- part number, 1–3, A–3
- replacing, 2–52
- replacing in a dual-redundant controller configuration, 2–52

- replacing in a single-configuration controller, 2–52

Installing
- cache module
  - dual-redundant controller configuration, 2–37
  - single-controller configuration, 2–17
- controller
  - dual-redundant controller configuration, 2–31
  - single-controller configuration, 2–14
- controller and its cache module
  - dual-redundant controller configuration, 2–24
- controller, cache module, and ECB, 3–17
- DIMMs, 2–59
  - dual-redundant controller configuration, 2–59
  - single-controller configuration, 2–59
- dual-redundant controller configuration
  - cache module, 2–37
  - controller, 2–31
  - controller and its cache module, 2–24
  - DIMMs, 2–59
  - fiber cable, 2–61
  - GLM, 2–48
  - hub, 2–61
  - switch, 2–61
- fiber cable, 2–61
  - dual-redundant controller configuration, 2–61
  - single-controller configuration, 2–61
- GLM, 2–48
- hub, 2–61
  - dual-redundant controller configuration, 2–61
  - single-controller configuration, 2–61
- mirrorset member, 2–65
- patches, 3–8
- PCMCIA card, new, 3–3
- RAIDset member, 2–65
- single-controller configuration
  - cache module, 2–17
  - controller, 2–14
  - DIMMs, 2–59
  - fiber cable, 2–61
  - GLM, 2–48
  - hub, 2–61
- software patches, 3–8
- switch, 2–61
  - dual-redundant controller configuration, 2–61
  - single-controller configuration, 2–61

Instance codes, 5–24 to 5–52
- structure, 4–41
- translating, 4–40

Interpreting event codes, 4–41

L

Last failure codes
- list, ?? to 5–101

Last failure reporting
- events
  - controller termination, 4–34

Last-failure codes
- displaying, 4–38
- logging, 4–42
- structure, 4–41
- translating, 4–40

Link errors
  fibre channel, 4–54
Listing
  patches, 3–8, 3–12
  software patches, 3–8, 3–12
Local connection
  connecting to the controller, 2–3
Locating
  devices, 4–59
Locking the program card, 3–5
Logging
  enabling in FMU, 4–42
  enabling verbose logging, 4–42
  timestamping, 4–43

M

Maintenance port
  precautions, xvii
  terminal or PC connection, 2–3
  See also Maintenance port cable, Terminal connection
Maintenance port cable
  See also Maintenance port, Terminal connection
Map of devices in subsystem, 4–48
Member
  replacing, 2–64
Memory-system failures, 4–38
Mirrorset member
  installing, 2–65
  removing, 2–64
Mirrorsets
  duplicating data with the Clone utility, 4–67

N

Nonvolatile memory
  fault-tolerance for write-back caching, 4–18
Note, defined, xx

P

Part numbers
  AC input module, 1–3, A–3
  BA370 rack-mountable enclosure, 1–3, A–3
  cache module, 1–3, A–3
  cooling fan, 1–3, A–3
  disk drives, 1–3, A–3
  dual-battery ECB, 1–3, A–3
  ECB, 1–3, A–3
  ECB Y cable
    BA370 enclosure, 1–6, A–6
    data center cabinet, 1–6, A–6
  EMU, 1–3, A–3
  Fibre Channel hub, 1–3, A–3
  Fibre channel optical cabling
    parts used in configuring the controller, 1–5, A–5
  Fibre Channel switch, 1–3, A–3
  GBIC, 1–3, A–3
  I/O module, 1–3, A–3
  power cable, 1–3, A–3
  power cable kit, 1–3, A–3
  power supply, 1–3, A–3
  PVA module, 1–3, A–3
  single-battery ECB, 1–3, A–3
Patches
  deleting, 3–10
  installing, 3–8
  listing, 3–12
  listing, installing, deleting, 3–8

PCMCIA card
  installing a new card, 3–3
  replacing, 2–62
    dual-redundant controller configuration, 2–62
    single-configuration controller, 2–62
Power cable
  part number, 1–3, A–3
Power cable kit
  part number, 1–3, A–3
Power source
  enabling write-back caching, 4–18
Power supply
  part number, 1–3, A–3
Power, verification, and addressing module. *See* PVA module
Precautions
  electrostatic discharge, xvi
  maintenance port, xvii
Problem solving, 4–4
Program card
  write-protection switch, 3–5
Publications, related, xxii
PVA module
  part number, 1–3, A–3
  replacing, 2–49
  replacing in a dual-redundant controller configuration, 2–49
  replacing in a single-configuration controller, 2–49

R

RAIDset member
  installing, 2–65
  removing, 2–64
Rate of transfer, checking to host, 4–46
Read capability, testing, 4–59
Reduced storageset, 2–64
Related publications, xxii
Remedies, 4–6
Removing
  cache module
    dual-redundant controller configuration, 2–34
    single-controller configuration, 2–16
  controller
    dual-redundant controller configuration, 2–28
    single-controller configuration, 2–12
  controller and its cache module
    dual-redundant controller configuration, 2–20
  DIMMs, 2–59
    dual-redundant controller configuration, 2–59
    single-controller configuration, 2–59
  dual-redundant controller configuration
    cache module, 2–34
    controller, 2–28
    controller and its cache module, 2–20
    DIMMs, 2–59
    fiber cable, 2–61
    GLM, 2–47
    hub, 2–61
    switch, 2–61
  failed mirrorset member, 2–64
  failed RAIDset member, 2–64
  fiber cable, 2–61
    dual-redundant controller configuration, 2–61
    single-controller configuration, 2–61

- GLM, 2–47
- hub, 2–61
  - dual-redundant controller configuration, 2–61
  - single-controller configuration, 2–61
- single-controller configuration
  - cache module, 2–16
  - controller, 2–12
  - DIMMs, 2–59
  - fiber cable, 2–61
  - GLM, 2–47
  - hub, 2–61
  - switch, 2–61
- switch, 2–61
  - dual-redundant controller configuration, 2–61
  - single-controller configuration, 2–61

Repair action codes
- list, 5–102 to 5–107

Repair-action codes
- logging, 4–42
- translating, 4–40

Replacing
- cache module
  - dual-redundant controller configuration, 2–34
  - single-controller configuration, 2–16
- controller
  - dual-redundant controller configuration, 2–28
  - single-controller configuration, 2–12
- controller and its cache module
  - dual-redundant controller configuration, 2–20
  - single-controller configuration, 2–12

DIMMs, 2–58
- dual-redundant controller configuration, 2–58
- single-controller configuration, 2–58

dual-redundant controller configuration, 2–19
- cache module, 2–34
- controller, 2–28
- controller and its cache module, 2–20
- DIMMs, 2–58
- ECB, 2–41
- ECB with cabinet powered off, 2–43
- ECB with cabinet powered on, 2–42
- fibre cable, 2–61
- GLM, 2–46
- hub, 2–61
- I/O module, 2–52
- PCMCIA card, 2–62
- PVA module, 2–49
- PVA module, master enclosure, 2–49
- switch, 2–61

ECB, 2–41

ECB with cabinet powered off, 2–43

ECB with cabinet powered on, 2–42

fiber cable, 2–61
- dual-redundant controller configuration, 2–61
- single-controller configuration, 2–61

GLM, 2–46

hub, 2–61
- dual-redundant controller configuration, 2–61
- single-controller configuration, 2–61

I/O module, 2–52

modules
- dual-redundant controller configuration, 2–19

  modules in a single-controller configuration, 2–11
  PCMCIA card, 2–62
  PVA module, 2–49
  single-controller configuration, 2–11
    cache module, 2–16
    controller, 2–12
    DIMMs, 2–58
    ECB, 2–41
    ECB with cabinet powered off, 2–43
    ECB with cabinet powered on, 2–42
    fiber cable, 2–61
    GLM, 2–46
    hub, 2–61
    I/O module, 2–52
    PCMCIA card, 2–62
    PVA module, 2–49
    PVA module, master enclosure, 2–49
    switch, 2–61
  storageset member, 2–64
  switch, 2–61
    dual-redundant controller configuration, 2–61
    single-controller configuration, 2–61
Required tools, xxi, 2–1, 3–1
Restart_type codes, 4–40
Restarting the subsystem, 2–10
Revision history, xxiii
Running
  controller self-test, 4–2
  DAEMON tests, 4–2
  DILX, 4–59
  FMU, 4–38
  VTDPY, 4–44

S
SCSI command operations, 4–40
Self-test, 4–2
Setting
  display characteristics for FMU, 4–41
Shutting down the subsystem, 2–8
  disabling the ECBs, 2–8
  enabling the ECBs, 2–8
Significant event reporting, 4–25
Single-battery ECB
  part number, 1–3, A–3
Single-controller configuration
  installing
    cache module, 2–17
    controller, 2–14
    DIMMs, 2–59
    GLM, 2–48
  removing
    cache module, 2–16
    controller, 2–12
    DIMMs, 2–59
    GLM, 2–47
  replacing
    cache module, 2–16
    controller, 2–12
    controller and its cache module, 2–12
    DIMMs, 2–58
    ECB, 2–41
    ECB with cabinet powered off, 2–43
    ECB with cabinet powered on, 2–42
    GLM, 2–46
    I/O module, 2–52
    PCMCIA card, 2–62
    PVA module, 2–49
  replacing modules, 2–11

  upgrading to dual-redundant controller configuration, 3–17

Software
  patches, 3–8
  upgrading, 3–2

Software patches
  deleting, 3–10
  installing, 3–8
  listing, 3–12
  listing, installing, deleting, 3–8

Solid OCP
  events
    controller termination, 4–28

Spontaneous event log
  no controller termination, 4–35

Starting the subsystem, 2–10

Status
  device ports, 4–50
  devices, 4–48
  host port, 4–46
  units, 4–51

Storageset member
  replacing, 2–64

Storagesets
  adding devices with the CONFIG utility, 4–64
  duplicating data with the Clone utility, 4–67
  generating a new volume serial number with the CHVSN utility, 4–68
  renaming the volume serial number with the CHVSN utility, 4–68

Structure of event codes, 4–41

Subsystem
  restarting, 2–10
  shutting down, 2–8
  upgrading, 3–1

Switch
  installing, 2–61
  installing in a dual-redundant controller configuration, 2–61
  installing in a single-configuration controller, 2–61
  removing, 2–61
  removing in a dual-redundant controller configuration, 2–61
  removing in a single-configuration controller, 2–61
  replacing, 2–61
  replacing in a dual-redundant controller configuration, 2–61
  replacing in a single-configuration controller, 2–61

Symptoms, 4–6

T

Templates, 5–112

Terminal connection
  See also Maintenance port, Maintenance port cable

Testing read capability, 4–59

This controller, defined, xix

Timestamp for logging, 4–43

Tip, defined, xx

Tools, xxi, 2–1, 3–1

Transfer rate
  checking to devices, 4–47
  checking to host, 4–46

Translating event codes, 4–40

Troubleshooting
  checklist, 4–4
  CLCP utility, 4–66

  generating a new volume serial number with the CHVSN utility, 4–68
  logging I/O activity with DSTAT, 4–68
  patching controller software with the CLCP utility, 4–66
  renaming the volume serial number with the CHVSN utility, 4–68
  replacing a failed controller with FRUTIL, 4–67
  replacing cache modules with FRUTIL, 4–67
  replacing ECBs with FRUTIL, 4–67
  table, 4–6
  See also Config utility
  See also HSUTIL
Turning off the subsystem, 2–8
Turning on the subsystem, 2–10
Typographical conventions, xix

U

Units
  checking I/O, 4–51
  checking status, 4–51
  exercising, 4–59
Unpartitioned mirrorsets
  duplicating data with the Clone utility, 4–67
Upgrading
  cache memory, 3–22
  controller software, 3–2
  controller software with the CLCP utility, 4–66
  device firmware, 3–14
  DIMMs, 3–22
  downloading new software, 3–4
  EMU software with the CLCP utility, 4–66
  installing
    controller, cache module, and ECB, 3–17
  installing a new program card, 3–3
  single controller to dual-redundant controller, 3–17
  using CLCP, 3–8
    deleting patches, 3–10
    deleting software patches, 3–10
    installing patches, 3–8
    installing software patches, 3–8
    listing patches, 3–12
    listing software patches, 3–12
Utilities and exercisers
  CHVSN utility, 4–68
  CLCP utility, 4–66
  Clone utility, 4–67
  CONFIG utility, 4–64
  DSTAT, 4–68
  FRUTIL, 4–67
  HSUTIL, 4–65

V

Verbose logging, 4–42
Virtual terminal display. *See* VTDPY
Volume serial number
  generating a new one with the CHVSN utility, 4–68
  renaming with the CHVSN utility, 4–68
VTDPY
  checking communication with host, 4–46
  commands, 4–45
  general description, 4–44
  running, 4–44

W
Warning, defined, xx
Write capability, test for devices, 4–61
Write protection for program card, 3–5
Write-back caching
  fault-tolerance, 4–18