# AlphaServer 2000 5/375 Systems

START

| | Order Number | Operating System | Server Systems, 64Bits 375MHz |
|---|---|---|---|
| #1 | DN-245D1-S9 | Windows NT Server | 128MB RX,CD 4.3GB NI SVGA |
| | DA-245D1-S9 | Digital UNIX | 128MB RX,CD 4.3GB NI SVGA |
| | DY-245D1-S9 | OpenVMS | 128MB RX,CD 4.3GB NI SVGA |
| | -D9 | =2x CPU | Wide |

For 240V Use, Select Power Cord and Keyboard.

#2 1x BN19C-2E EUROPE BN19A-2E (GB) BN19K-2E (DK) BN19M-2E (I)
BN19E-2E (CH) BN18L-2E (IL) BN19S-2E India

| | Keyboard | | | | SVGA Color Monitor | |
|---|---|---|---|---|---|---|
| #3 | LK471 NT/UNIX | -AE (GB) | -AH (NL) | -AN (N) | Monitor | VRC15-KA 15" |
| | | -AB (B) | -AI (I) | -AP (F) | | VRT17-PA 17" |
| #4 | LK461 OVMS | -AD (DK) | -AK (CH)F | -AS (E) | | VRC21-PA 21" |
| | | -AF (FI) | -AL (CH)G | -AT (IL) | | |
| | | -AG (D) | -AM (S) | -AV (P) | | |

## Internal Options:

SMP: Second CPU module 375MHz — 490NR-AA NT, 490AR-AA UNIX, 490YR-AA OVMS + H7895-AA Second Power Suply

**Memory Expansion**

MS452-UB 128MB upd → Base module; MS452-BA 128MB → Second option. Max two. Max Memory 2x 512MB = 1GB

**Internal Storage**

**Tape**

| | |
|---|---|
| TLZ07-LG | 8GB DAT tape drive |

**Wide disks**

| | |
|---|---|
| RZ26L-VW | 1.05GB hard disk, wide |
| RZ28D-VW | 2.1GB hard disk, wide |
| RZ29B-VW | 4.3GB hard disk, wide |
| KZPSC-BA | RAID 3-port PCI-controller ,wide |
| BC25U-2H | Order 1 or 2 SCSI-cable, wide |

**Controllers**

| | | |
|---|---|---|
| PBXGA-AA | PCI-based ZLXp-E1 8PL Graphics | OSF & VMS |
| PBXGA-AN | PCI-based ZLXp-E1 8PL Graphics | NT |
| KZPSA-BB | PCI-based Fast-Wide-Differential SCSI | |
| KFESB-AA | DSSI EISA-controller, OpenVMS | |
| KFPSA-AA | PCI-based DSSI controller, OpemVMS | |
| BC29S-09 | DSSI cable | |
| CIPCA-AA | PCI-based CI-controller, OpenVMS | |
| DEFPA-AA | FDDI PCI, single attachment | |
| DEFEA-AA | FDDI EISA, single attachment | |
| DE435-AA | PCI-based Ethernet controller | |
| DE425-AA | EISA-based Ethernet controlle | UNIX, OVMS |
| DNSES-AA | Synchronous coms. EISA | UNIX, OVMS |

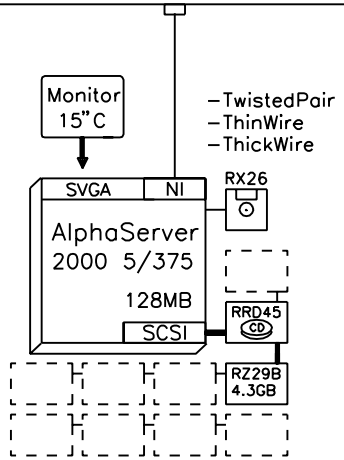


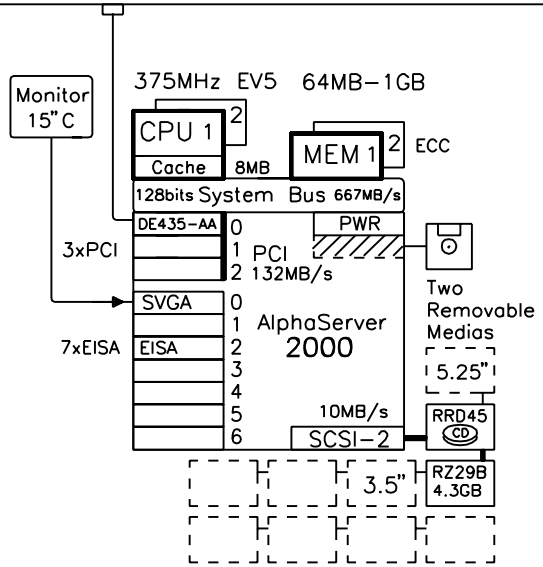


-Mouse
-Kb
-Com1
-Com2
-Parallel

Licenses included per system type:

- Windows NT Server + 5-client access, V3.51 media kit.
- Digital UNIX operating system base license Digital NAS Base Server 200 license
- OpenVMS operating system base license Digital NAS Base Server 200 license

## External Options:

**Tape**

| | |
|---|---|
| TZ88N-TA | 40GB tape drive, table top |
| BN23G-01 | SCSI-cable, narrow |
| BN19C-2E | PowerCable, European |
| KZPAA-AA | Recomended controller ,narrow |
| BC25S-2F | Internal narrow cable |
| BN21H-02 | Ext narrow cable to BA350-KF |
| BN21N-02 | Ext narrow cable to BA356-KC |

**Wide disks**

| | |
|---|---|
| KZPSC-BA | RAID 3-port PCI-controller, wide |
| BN31S-1E | Oder 1 or 2 SCSI cables , wide |
| BA356-KC | StorageWorks pedestal, wide |
| BN19C-2E | Power cable, European |
| RZ26L-VW | 1.05GB hard disk, wide |
| RZ28D-VW | 2.1GB hard disk, wide |
| RZ29B-VW | 4.3GB hard disk, wide |

Total: 1-7

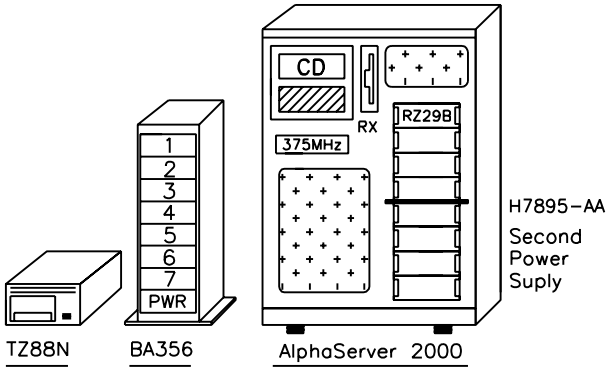


2000

Software Processor Code: G

GEAS202A

digital | 21-Oct-1996 | Detail Layer | GOLDas20005375a

AlphaServer 2000 5/375 Systems

GOLDEN EGGS Visual Configurations, Helsinki